BOLD & BRILLIANT

YAWAL WINDOWS + DOORS USA





# WINDOWS AND DOORS
# INDUSTRIAL

Industrial windows and doors combine that bold industrial look with modern-day performance. Choose from three distinctive profiles - Slim, Steel, and Cubic - each designed to match different architectural moods.

Need curved shapes? No problem. These windows are fully customizable to fit even the most creative builds. From urban lofts to boutique commercial projects, this system adds character without compromising comfort.

## SPECIAL FEATURES

- Three profiles: Slim, Steel, Cubic
- Hidden drainage for clean lines in any weather
- Fully customizable, including curved shapes
- Inward or outward opening available

Yawal USA
11 West Hudson Avenue
Englewood, NJ 07631

yawalusa.com
201-753-1295
office@yawalusa.com

INDUSTRIAL

# BOLD & BRILLIANT

## TECHNICAL SPECIFICATIONS FOR WINDOWS

| | |
|---|---|
| Water tightness | Inwards 12 psf / Outwards 15 psf |
| Design pressure | Operable CW 50 psf / Fixed CW 65 psf |
| Thermal insulation / U-Value | From 0.13 Btu/hft$^2$F |
| Acoustic insulation | STC up to 46 dB |
| Max panel weight | 900 lbs (400 kg) |
| Glazing | Double and triple |
| Max Panel Height* | 10 ft / 3048 mm |
| Max Panel Width* | 4.5 ft / 1524 mm |

### INDUSTRIAL WINDOW (INWARD OPENING)

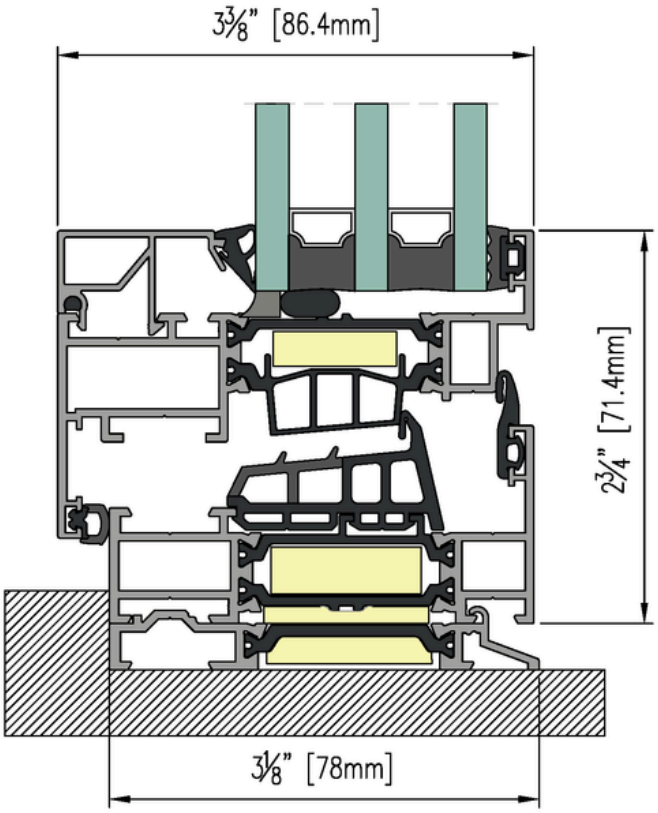


### INDUSTRIAL SLIM STYLE FIXED WINDOW

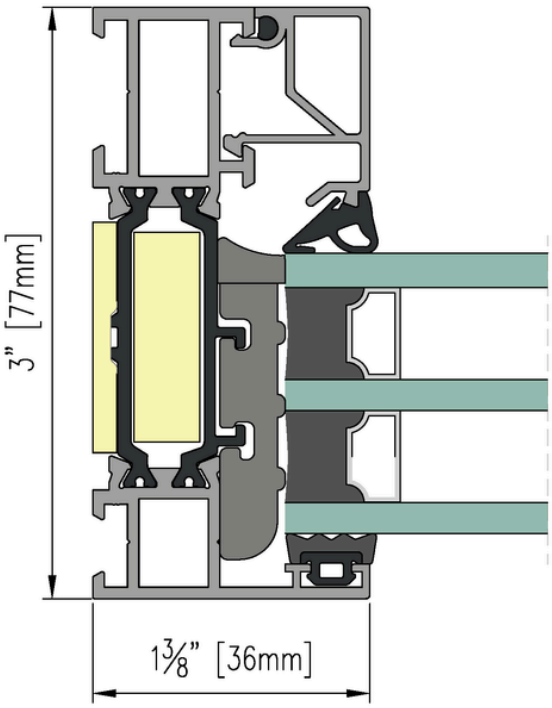


Yawal USA
11 West Hudson Avenue
Englewood, NJ 07631

yawalusa.com
201-753-1295
office@yawalusa.com

INDUSTRIAL

# BOLD & BRILLIANT

## TECHNICAL SPECIFICATION FOR DOORS

| | |
|---|---|
| Water tightness | 9 psf |
| Design pressure | LC 60 psf |
| Thermal insulation / U-Value | From 0.17 Btu/hft$^2$F |
| Acoustic insulation | STC up to 42 dB |
| Max panel weight | 500 lbs (230 kg) |
| Glazing | Double and triple |
| Max Panel Height* | 10 ft / 3048 mm |
| Max Panel Width* | 4.5 ft / 1524 mm |

### INDUSTRIAL DOOR INWARD OPENING

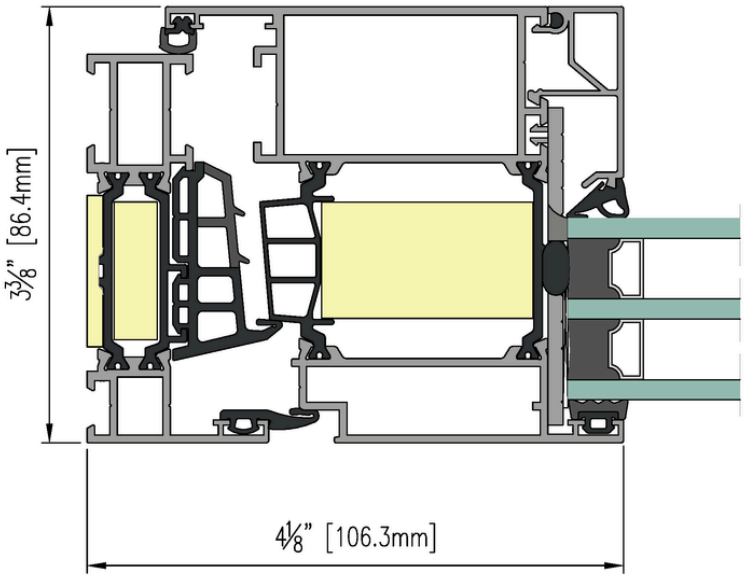


### INDUSTRIAL DOOR INWARD OPENING WITH THRESHOLD

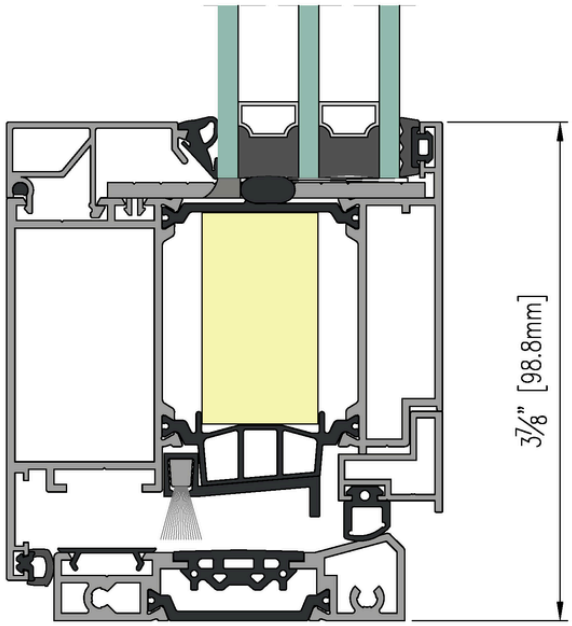


Yawal USA
11 West Hudson Avenue
Englewood, NJ 07631

yawalusa.com
201-753-1295
office@yawalusa.com

# EXAMPLES OF CONFIGURATIONS

## WINDOWS

### FIXED

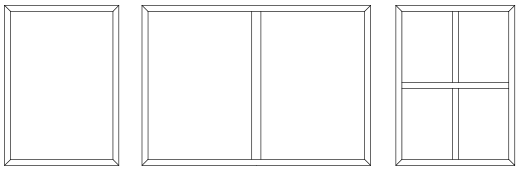

### CASEMENT (OUTWARDS)

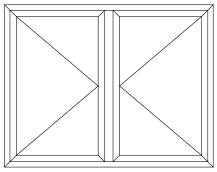

### CORNERS

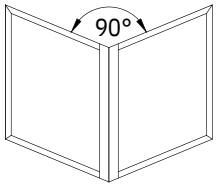


### TILT&TURN

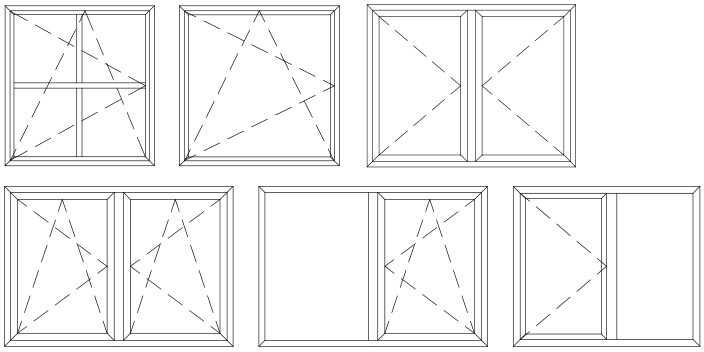

### SPECIAL

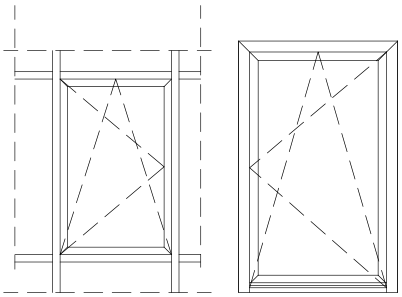

## DOORS

### SINGLE DOOR

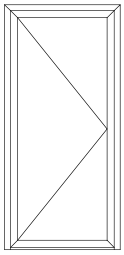

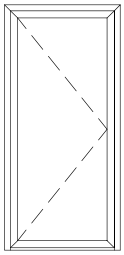

### SINGLE DOOR WITH TRANSOM

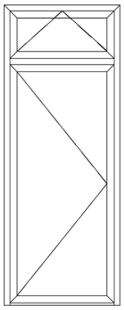

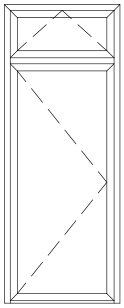

### DOUBLE DOOR

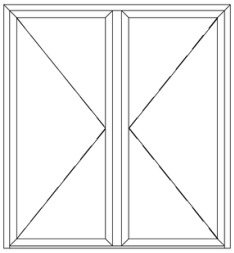

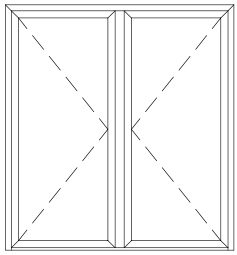

### DOUBLE DOOR WITH TRANSOM

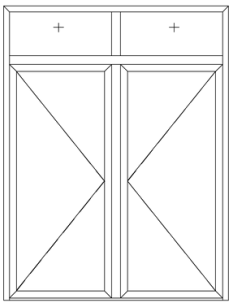

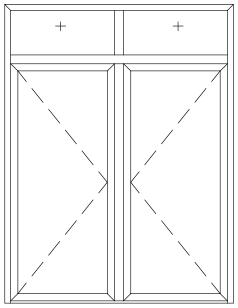

### DOUBLE DOOR WITH SIDELIGHT

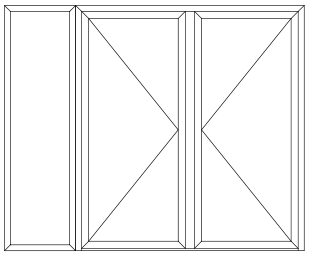

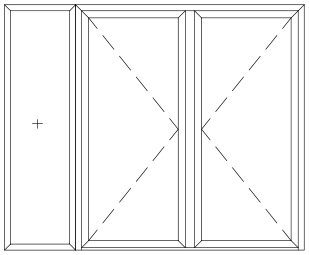

Yawal USA
11 West Hudson Avenue
Englewood, NJ 07631

yawalusa.com
201-753-1295
office@yawalusa.com

# TRACK PROFILES

## SLIM



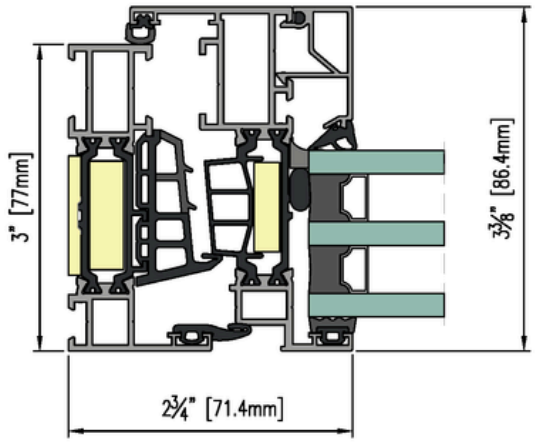


## STEEL

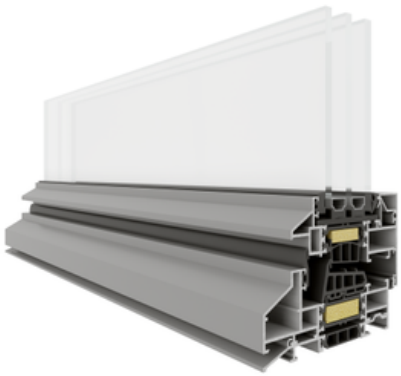

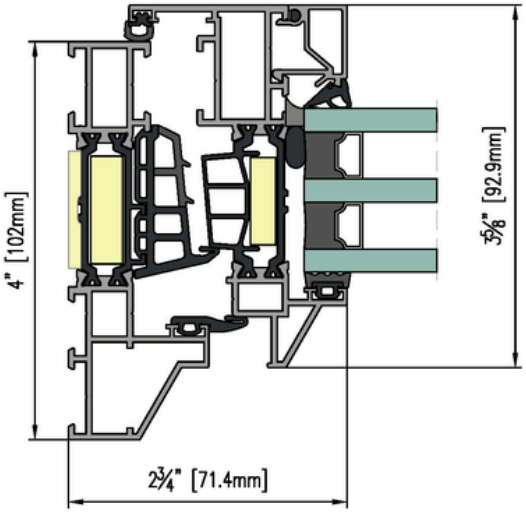


## CUBIC



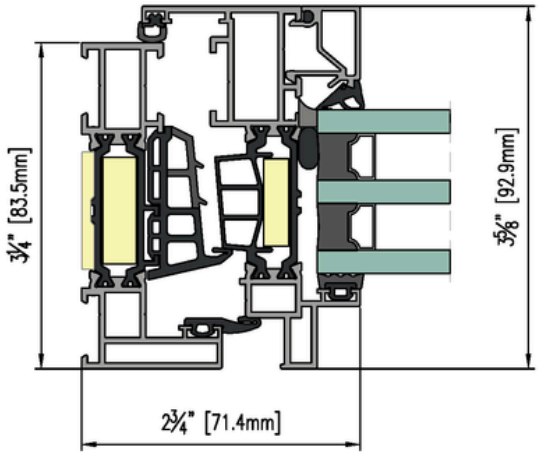


Yawal USA
11 West Hudson Avenue
Englewood, NJ 07631

yawalusa.com
201-753-1295
office@yawalusa.com

# WINDOW ACCESSORIES

## Handles


Standard


Cubic


Contemporary


Inox


Outward

## Drainage options

Visible



Concealed



## Hardware options

Visible



Concealed



## Screens


Roller Insect Screen


Fixed Insect Screen

## SDL - Simulated Divided Lite


SDL in between panes / grids in pane


SDL over panes / Stuck-on grids


Simulated divided lites

## Glass

### Glass Types


Laminated


Tempered

### Extras


High Altitude


Acoustic Insulated


Spandrel / Frit / Lacobel


Bird / Turtle Friendly


Priva Lite Switch Glass

### Glazing


Double


Triple

### Glass thickness range


Min: 0.83" (21 mm)
Max: 2.40" (61 mm)

### Colors

Color options available upon request. Refer to website for specific color names.

Yawal USA
11 West Hudson Avenue
Englewood, NJ 07631

yawalusa.com
201-753-1295
office@yawalusa.com

# DOOR ACCESSORIES

## Handles

Standard



Cubic



Contemporary



Inox



## Pull-handles



## Hinges

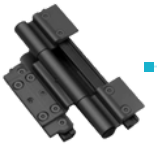

Roller Hinge

## Door Cylinder



Single-key cylinder system



Cylinder + Knob

## Door locks



Single point lock



Triple point lock

## SDL - Simulated Divided Lite



SDL in pane



SDL interior/exterior

## Access control 4in1



- Bluetooth
- Finger print
- Code
- RFID card

## Door closer

Hidden - boxer



Visible



Hidden - Limiter Operable



## Glass

### Glass Types



Laminated



Tempered

### Extras



High Altitude



Acoustic Insulated



Spandrel / Frit / Lacobel



Bird / Turtle Friendly



Priva Lite Switch Glass

### Glazing



Double

### Glass thickness range



Min: 0.24" (6 mm)
Max: 1.81" (46 mm)

**Colors**

Color options available upon request. Refer to website for specific color names.

Yawal USA
11 West Hudson Avenue
Englewood, NJ 07631

yawalusa.com
201-753-1295
office@yawalusa.com

INDUSTRIAL

# BOLD & BRILLIANT

YAWAL WINDOWS + DOORS USA

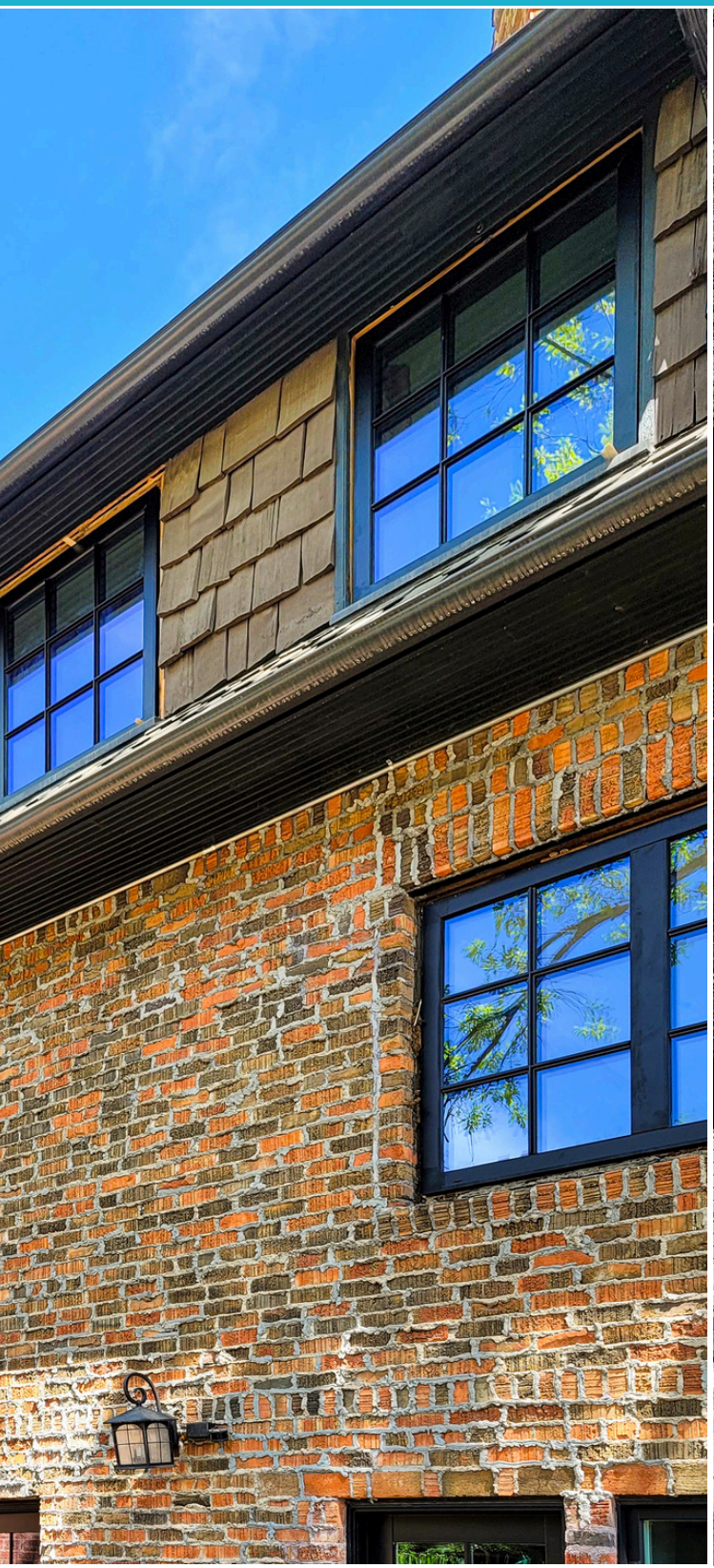



Yawal USA
11 West Hudson Avenue
Englewood, NJ 07631

yawalusa.com
201-753-1295
office@yawalusa.com

BOLD & BRILLIANT

YAWAL WINDOWS + DOORS USA

# OUR MISSION

## WE PROVIDE THE HIGHEST QUALITY EUROPEAN ALUMINUM SYSTEMS WITH THE BEST, DEDICATED CUSTOMER SERVICE FOR THE AMERICAN MARKET

Since 1990, YAWAL has pioneered high-performance architectural aluminum systems, setting new standards in the European industry. What truly sets us apart is our complete vertical integration - from our own aluminum extrusion facilities to system design, full prefabrication, and dedicated technical support. This end-to-end control ensures unmatched quality and security while allowing us to deliver exceptional products directly to your door. Backed by over three decades of innovation and comprehensive service excellence, YAWAL USA continues to lead the industry with solutions that combine superior thermal performance with beautiful aesthetics, turning your architectural vision into reality with precision and care.

- EXPANSIONS AND TRANSFORMATIONS
- COMMITMENT TO SUSTAINABILITY
- INNOVATIVE BREAKTHROUGHS
- ADAPTING TO MARKET NEEDS

# VALUES

QUALITY

CUSTOMER FOCUS

COMMITMENT

INTEGRITY

INNOVATION

SUSTAINABILITY







AIA Continuing Education Provider

Yawal USA
11 West Hudson Avenue
Englewood, NJ 07631

yawalusa.com
201-753-1295
office@yawalusa.com