BOLD and BRILLIANT

Assembly Instruction

Windows

BOLD AND BRILLIANT

WINDOWS AND DOORS

Unloading And Installation Guidelines

When you receive an assembly order, it is your responsibility to immediately contact the General Contractor to confirm the RO on the Project you will be assembling. Yawal USA is NOT responsible for any non-compliance/incorrectly prepared RO on the construction site.

Unloading A Container On The Job Site:

-You must be prepared for most containers with Yawal USA products to come directly to the job site

-To unload the container, you need a forklift with a capacity of at least 6,000 lbs, equipped with additional forks that are 8 feet long

-Remember to be especially careful when unloading - aluminum structures and glass are sensitive to strong shocks and impacts

-During unloading, check each rack and structure for any visible damage

-The person who unloads the container is responsible for any damage occurring during unloading

Before the container arrives, Yawal USA will send information on how the container was packed, such as:

-How many racks are included in the container

-What is on a specific rack and where they are in the rack

-What are the dimensions

After unloading, you have 48 hours to send confirmation of unloading, any possible damage during transport to the job site and confirm completeness or the shipment. **Yawal USA is not responsible for any damage caused DURING UNLOADING.**

Remember that the Person Driving the Forklift Should Have Appropriate Qualifications and Experience

Note On Building Developments

- Improper design and/or non-conforming application of building envelope materials has been demonstrated to cause premature building envelope failure.
- Even with premium materials, shortcuts and errors in the final installation can impact budgets, time frames, building life span, and increase legal liabilities.
- As one of the elements that bisect the interior/exterior plane, window and door integrations are a critical element of the building envelope as a whole.
- Poor installations can carry significant liability, due to building envelope failure.

Important Notice & Information

The building development must be correctly prepared with weather resistant barriers that meet local and state codes. All frame and sill surfaces must be correctly prepared for air, water, and structural integrity *by the Builder or Contractor before attempting installation*.

In order to meet warranty requirements, all systems are required to be installed by a Certified Installer.

- Read these instructions in their entirety prior to installing windows. If you have questions, contact your Project Manager or Yawal USA at 201-753-2195 for clarification.
- Yawal USA is not responsible for site measurements nor the structural and architectural requirements for the installation of the windows.
- Building design, construction methods, building materials and site conditions unique to your project may require methods different from these instructions.
- Choosing the appropriate method is the responsibility of you, your Architect, or your construction professional.
- Confirm with sealant/foam/barrier manufacturers that all materials used are compatible with one another.
- Remove shipping blocks and related staples prior to installation.
- All drawings are shown not to scale.
- To ensure accuracy, make sure you have the latest approved shop drawings and assembly and installation guides.
- Any local, regional or national building code requirements supercede these instructions.
- Safety is top priority for Yawal USA; please use proper work procedures and protective equipment.

***Site Preparation Advisory*: This manual is intended for construction professionals with proven competency installing curtain walls, sliders, doors and windows for large openings. Window installations are complex and should not be attempted based on simple written document.**

Site Preparation Advisory

These instructions request that the building envelope include proper rough opening support with weather resistant barriers to meet or supersede all local building codes.

1. Laser Level
2. Hammer
3. Pry Bars
4. Ladders
5. Scafold
6. Utility Knife
7. Screw Gun with a Phillips Driver bit
8. Foam Gun
9. Tape Measure
10. Caulk Gun
11. Allen Wrench
12. Torx Key

Site Preparation Advisory

Suggested Materials Required:

1. Hig-impact composite (not wood) shims/spacers
2. 2” #10 screws (stainless steel recommended)
3. Expansion foam - closed cell (low-expansion only)
4. Window & door flashing tape (6” recommended)
5. Window & door sealant **(Sika**sil sg-20 or dc 895/dc 993/dc995 or Illbruck ct113

Weather Barrier Material Selection (*though this guide only includes one type of barrier material, various options are available to meet individual site requirements*):

1. Vapor permeable building wraps
2. EPDM
3. Fluid-applied materials
4. Self-adhered membranes
5. Medium density spray-polyurethane foam
6. Factory-bonded membranes

Verify The Rough Opening

1. Measure the rough opening and the window/door to determine that the size is correct. recommended rough opening is 1” (25mm) larger than the window/door width and height.
2. Ensure that the rough opening is plumb, level and square, and the walls in the opening are not twisted.

   A) Ensure proper header is in place before installation.

   B) Make necessary corrections.
3. The preparation of the rough opening for large openings such as those required by, but not limited to, liftslide, bifold or slide doors have unique requirements.
4. Structural headers that allow for deflection no greater than 2/8” along the unsupported length once the header is fully loaded are required. Special care needs to be taken when installing any unit including transoms above such large opening units.
5. This manual is intended for construction professionals with proven competency installing doors for large openings. it is also recommended that Certified Installers are being used when installing this product.
6. This installation describes and recommends proper installation methods to ensure air, water and structural integrity will be maintained for maximum performance. During installation the fit, finish and function will be critical to get it right the first time by making sure to perfectly level the sill and maintain a square opening.
7. Recommended by Yawal USA is using sill pan for lift and slide door and sliders without extra drainage profile and for door.

Pre-Installation Check List Big Openings - Lift&Slide, Bifold, Sliding Door

You Must Work From The Provided Shop Drawings To Prepare The Opening

- The rough opening is the correct size, plumb and square. no sagging header. Take into account if the roof has been loaded or not. The maximum deflection over entire length of opening should not exceed 2/8” max. after the roof is loaded.
- Verify that the concrete or sub-floor where the system is to be installed is level. The frame system may be shimmed to compensate for an uneven floor but will adjust the relationship of the systems sill to the finished floor and may increase the overall height of the system in the opening. Any serious deflection in the concrete or sub-floor where the system is to be installed must be corrected prior to installation.
- It is important that your Framer knows the finished floor thickness to determine the header height.
- Multi-slide sills come in a variety of riser heights and should be noted for the one specified for your application.
- The level of the finished floor needs to be determined ahead of time and noted somewhere near the opening.
- Exterior surface must have a negative slope from the sill assembly to allow water run-off from weep system (recommend 3 degrees)
- Seal and finish all the panels and wood surfaces (specifically the edges) prior to installation, as it will be difficult to finish after the panels are installed. It also protects the wood from swelling and contracting, which can damage the wood itself and cause problems with operation.
- Once the doors are installed, it is difficult to access the overlapping stiles on the doors for any adjustment or finishing.
- Either wood framing or a continuous plane of plywood should be in place to anchor the head and/or side jamb.

Pocketing System

- Ensure that the finished pocket width and depth is correct.
- These dimensions are referenced in your shop drawings.
- The outside wall of the pocket needs to be framed in and sheathed according to the building codes in your area.
- Wait to build the interior pocket walls until after the installation of the doors. This will allow easier access to the exterior pocket walls for installation of the head and bottom track; easier installation of the panels once the head and bottom track.

Sill Pans

- Sill pans can be rigid or flexible and are a highly recommended option to be used.
- Pan flashing is used at the base of openings and designed to collect and drain water directly to the exterior.
- Sill pans should be slightly sloped outward
- Before fastening the rigid sill pan, apply three line seal onto the construction plate - one outboard, inboard and at the exterior down turned leg. Continue the sealant approx. 6” up both jambs at each end.
- Set the pan into the sealant and check the level. Secure the end dams with fasteners as required.
- Seal the end dams with sealant; tool the end dams to the framing
- All installations must have a weather resistant barrier. water resistant barrier should be applied and glued per Manufacturer's instructions.
- If water resistant barrier is applied then cut away with a complete box cut of the opening.
- No water resistant barrier should be brought into the rough opening.
- Cut back and expose the sheathing at the side jambs by removing approximately 1“of water resistant barier. This will create direct-contact seal to the sheathing for flashing.
- Ensure that the flashing and the sill pans are properly overlapped and remain water resistant.

IMPORTANT! Installation Sealants Must Be Chemically Compatible With The Rubberized Asphalt Membrane Applied To The Sill Assembly. Synthetic Copolymer Sealants Are Not Recommended. Incompatible Sealants May Cause Irreparable Harm To The Sill System.

STEP 1 Prepare Wall To Install Window And Check The Diagonals

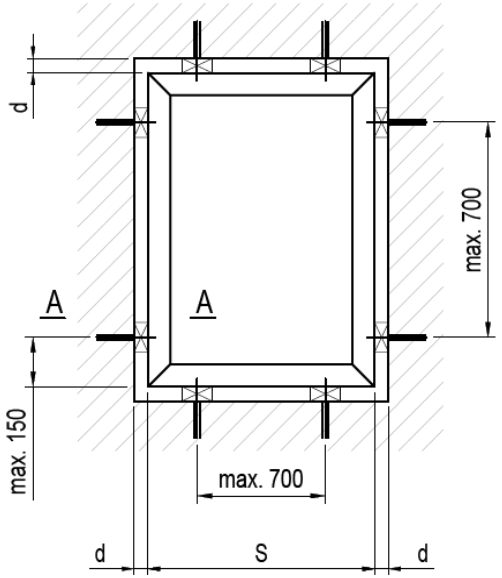

1. Insert brackets in the frame channels.
2. Insert the window into the opening.
3. Pre-set the frame and block it with shims in the spaces between frame and wall. Adjust with shims and make sure that frame is level in all directions.

For installation through the frame, the screw spacing should be the same as for the brackets.

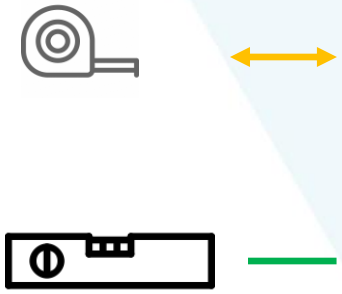

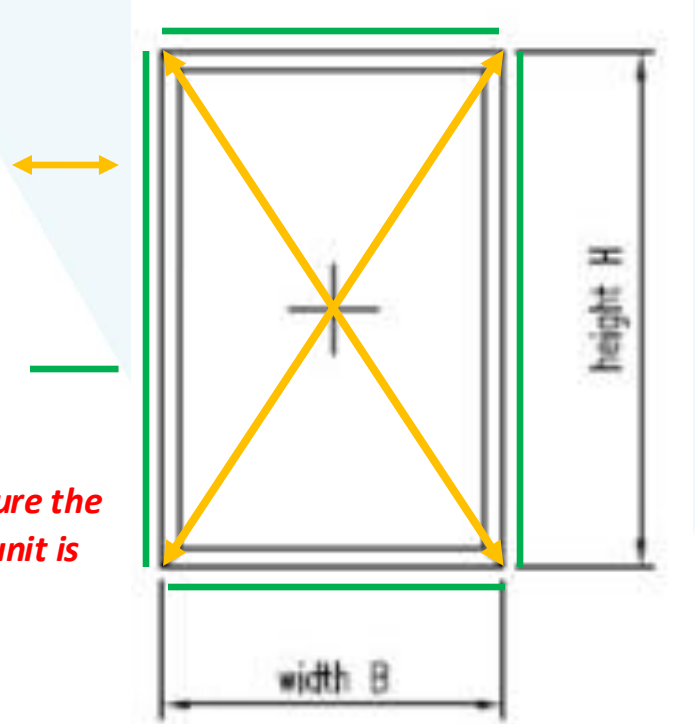

Item width to up	s	< 100”	<140”	<180”
Minimum gap width	d	25/64”	19/32”	25/32”

- **Max 150mm = max 6”**
- **Max 700mm = max 28”**

Attention: There should be shims under each anchor.

Attention: Attention: Measure the diagonals to make certain unit is square and plumb.

STEP 1 Prepare Wall To Install Window And Check The Diagonals

Shims are used to block and set vertical/horizontal and levels of windows.
See examples below of recommended shims:

15/64'' [6 mm] thick

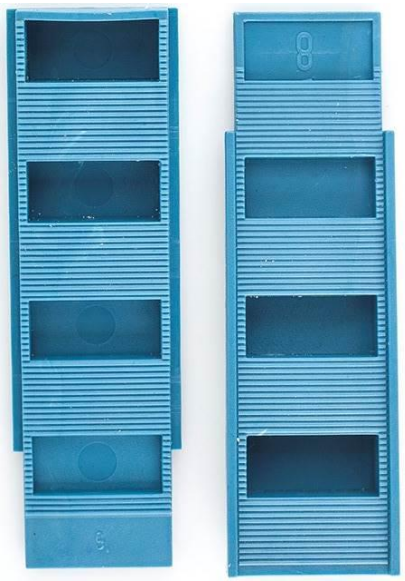

5/16'' [8 mm] thick

Fix Window

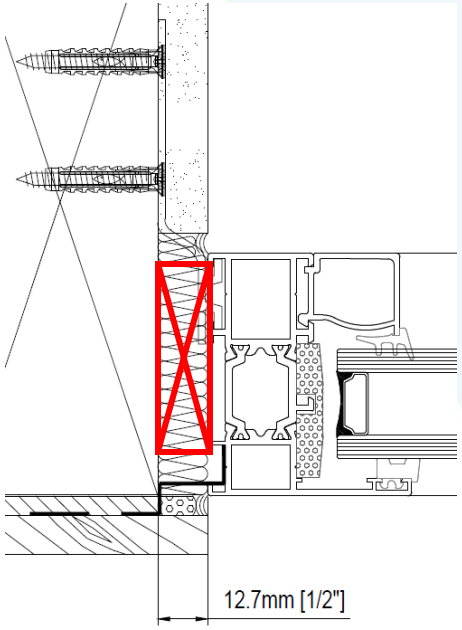

Operable Window

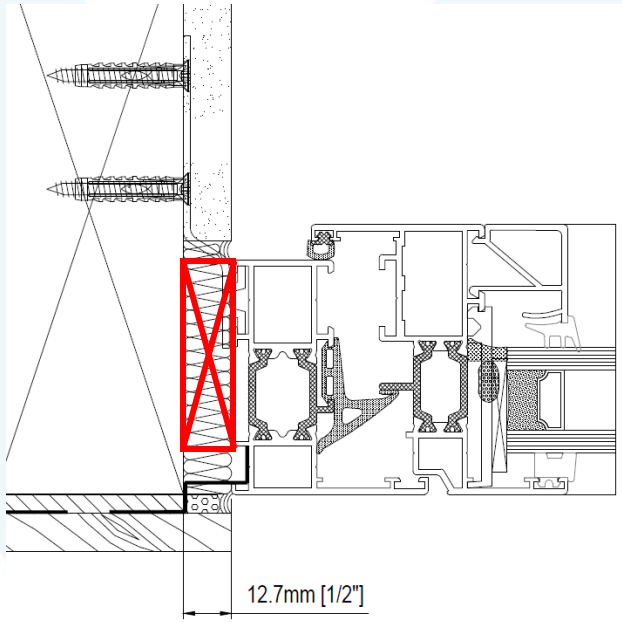

Shims can be stacked if necessary.

STEP 1 Prepare Wall To Install Window And Check The Diagonals

Shims are used to block and set vertical/horizontal and levels of windows.
See examples below of recommended shims:

15/64'' [6 mm] thick

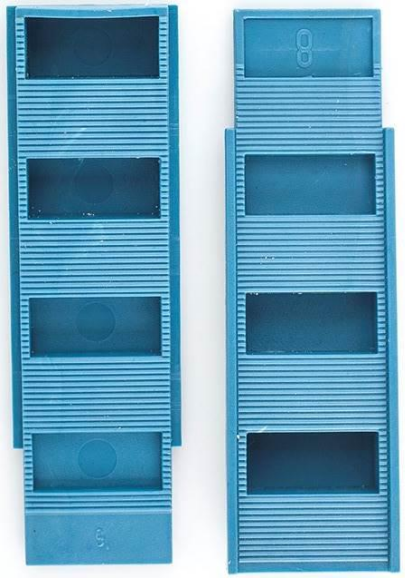

5/16'' [8 mm] thick

Outward window installation by frame!
After screw, cover hole.

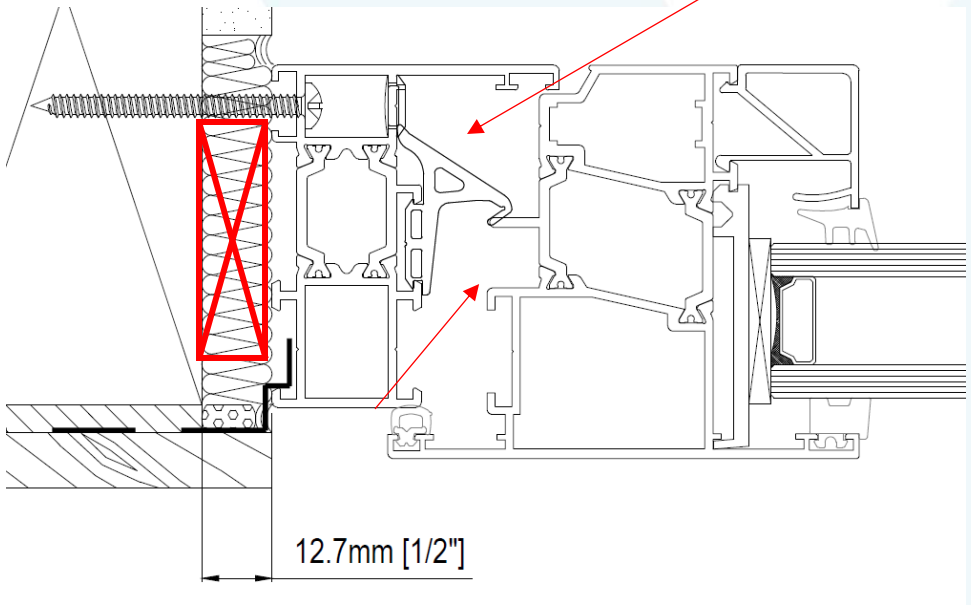

Shims can be stacked if necessary.

Note: For installation through the frame, the screw spacing should be the same as for the brackets.

STEP 1 Prepare Wall To Install Window And Check The Diagonals

Shims are used to block and set vertical/horizontal and levels of windows.
See examples below of recommended shims:

15/64'' [6 mm] thick

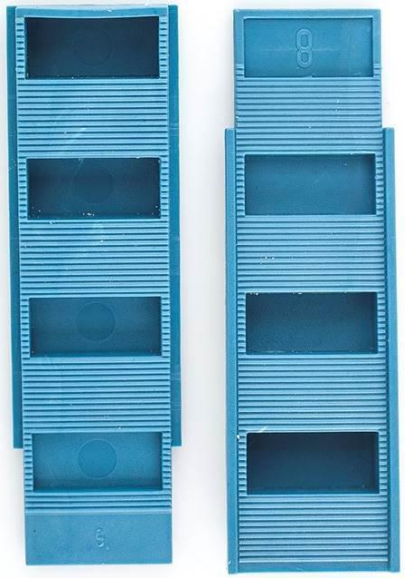

5/16'' [8 mm] thick

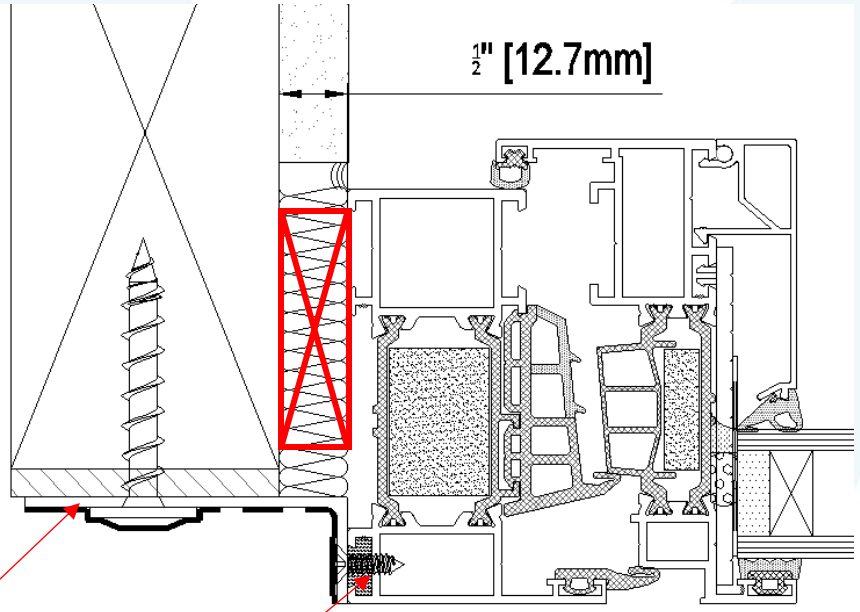

Window installation by nailfin!

Seal the joint with silicone.

Shims can be stacked if necessary.

Note: For installation through the frame, the screw spacing should be the same as for the brackets.

STEP 2 Corner Joints Of Profiles

4	18.11065.x	101.0406.0	101.0407.0	101.1133.0
5	18.11077.x	101.0410.0	101.0411.0	
6	18.18065.x	101.0406.0	101.0406.0	
7 8	18.34127.x 18.34172.x	2 x 101.0402.0	2 x 101.0403.0	

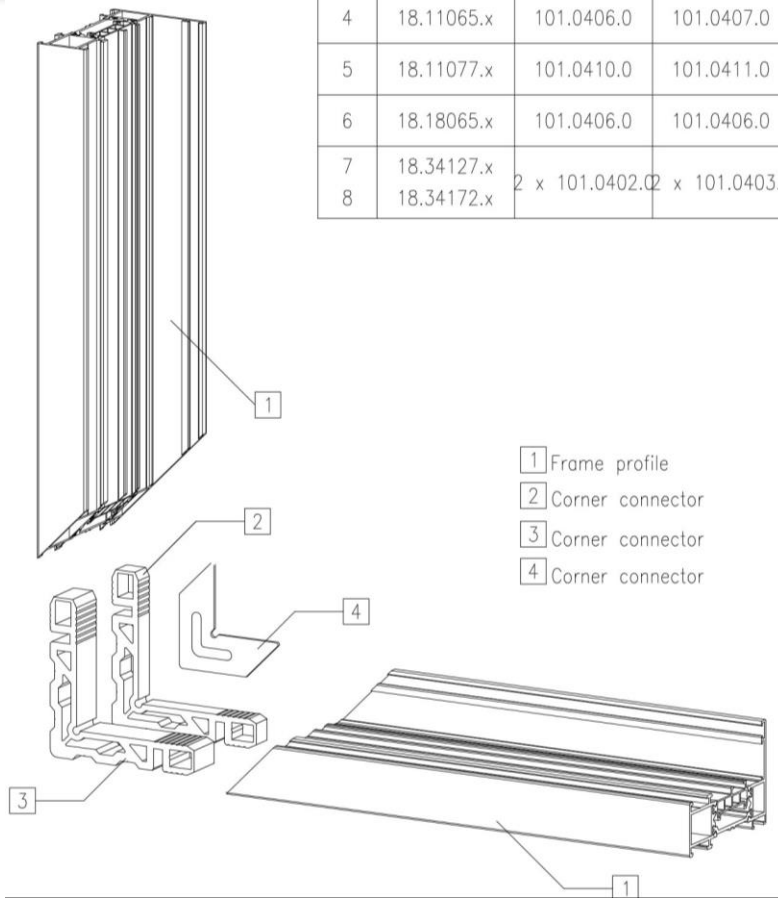

In some cases it could be necessary to connect frames or sash profiles. Regardless of the windows system the assembly is the same.

In order to assemble the corners, apply the glue on the surface of each corner connectors, the surface should be sealed by using silicone along cutting line.

Next install the corner keys according to the drawings and instructions below:

1. Insert the first corner key
2. Insert the 2nd corner key
3. Insert the corner keys alternately until the surface is flush.

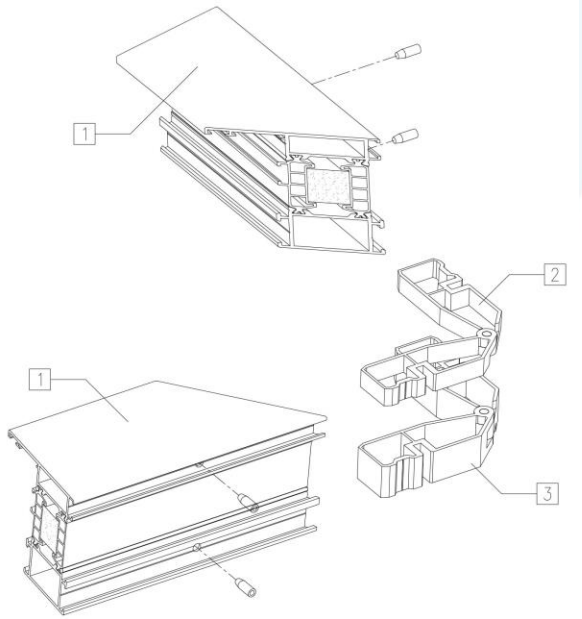

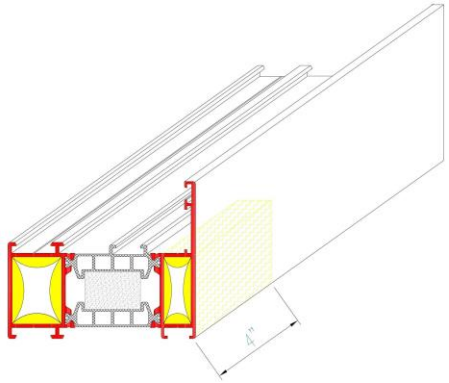

Red marks – silicone sealant

Yellow marks – glue

Note: glue must be inserted 4” deep inside the profile.

Recommended Glue : WURTH K+D or Cosmopur 818

STEP 2 Corner Joints of Profiles

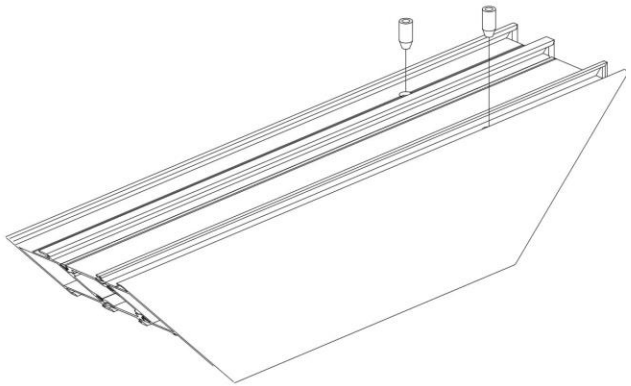

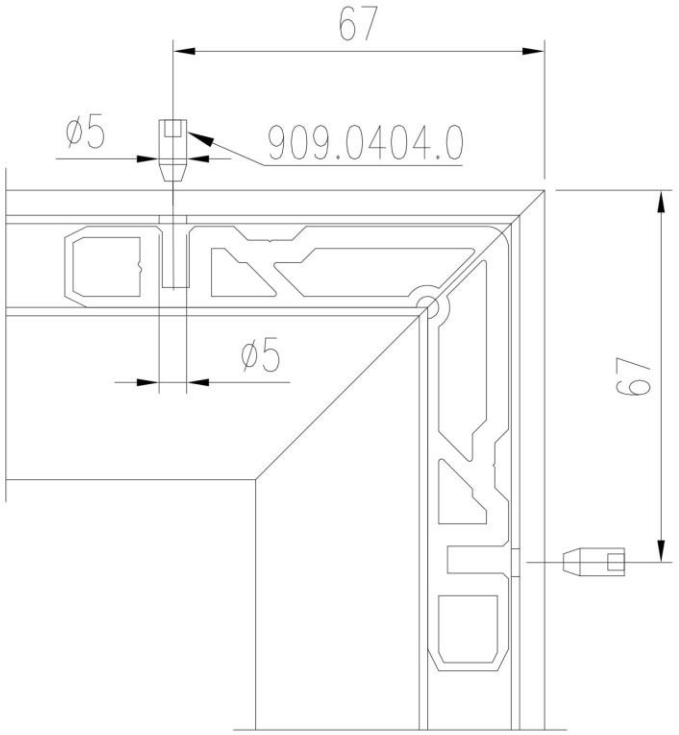

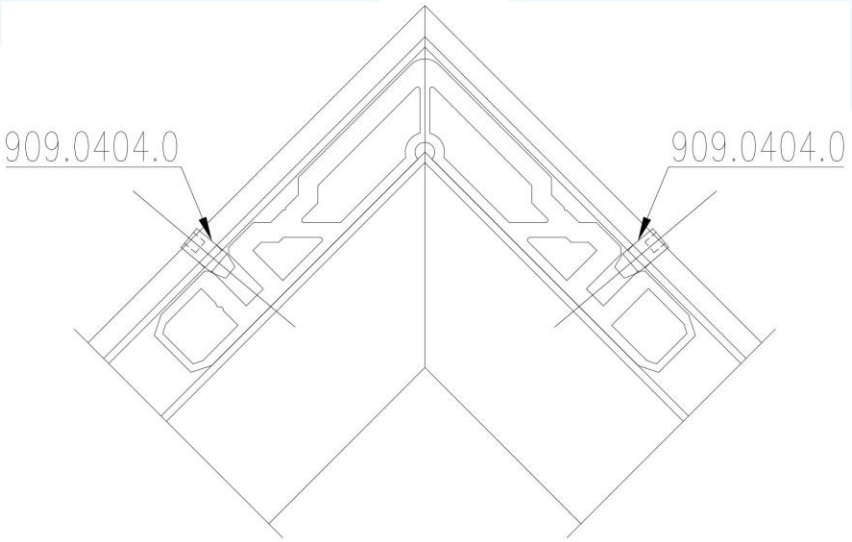

STEP 3 T-Type Joints

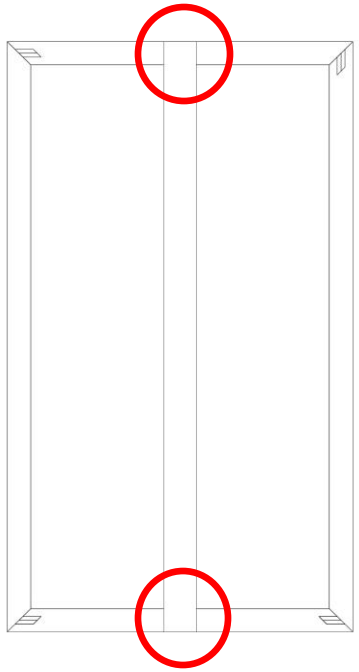

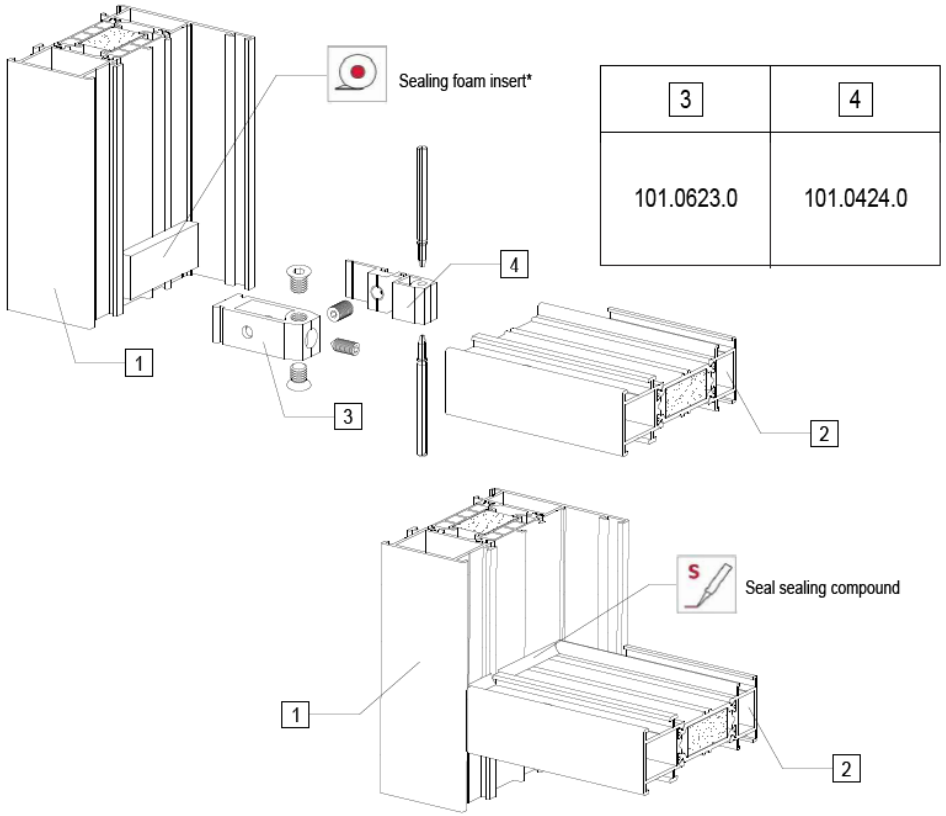

3	4
101.0623.0	101.0424.0

In order to join T-type, apply the glue on the surface of each corner connector.

The surface should be sealed by applying silicone.

All mounting holes prepared by fabricator.

STEP 4 Angles Joints

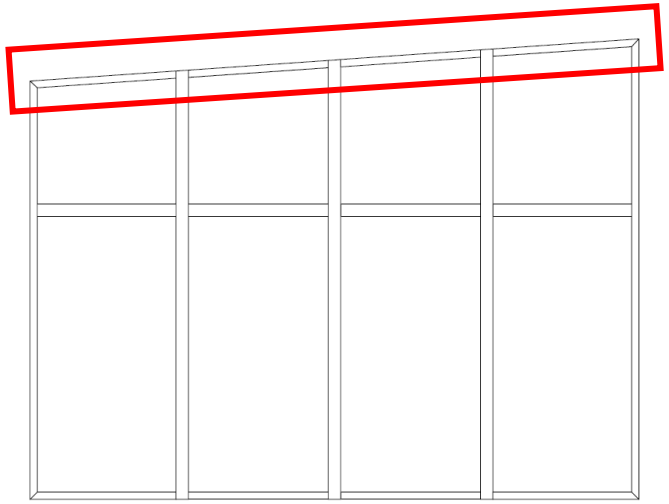

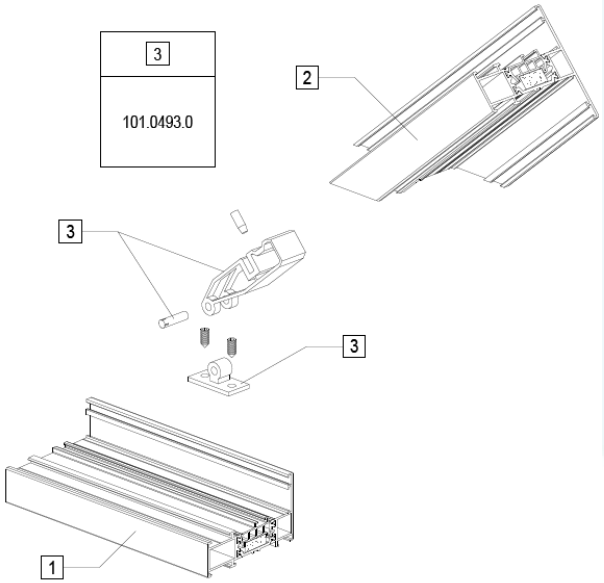

In order to angle joint, apply the glue on the surface of each corner connector.

The surface should be sealed by applying silicone.

All mounting holes prepared by fabricator.

Attention: Measure the diagonals of the frame after connection.

IMPORTANT! Frame needs 24 hours for glue to dry.

STEP 5 Install EPDM Foil

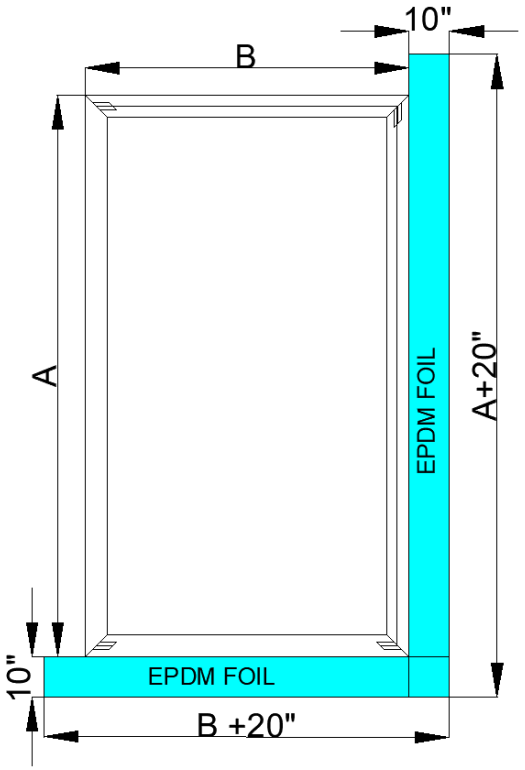

Cut the EPDM foil to the required length.

Attention! The EPDM foil must be 20" longer than window frame dimensions.

A – Height

B – Width

Install the EPDM foil in the frame channel.

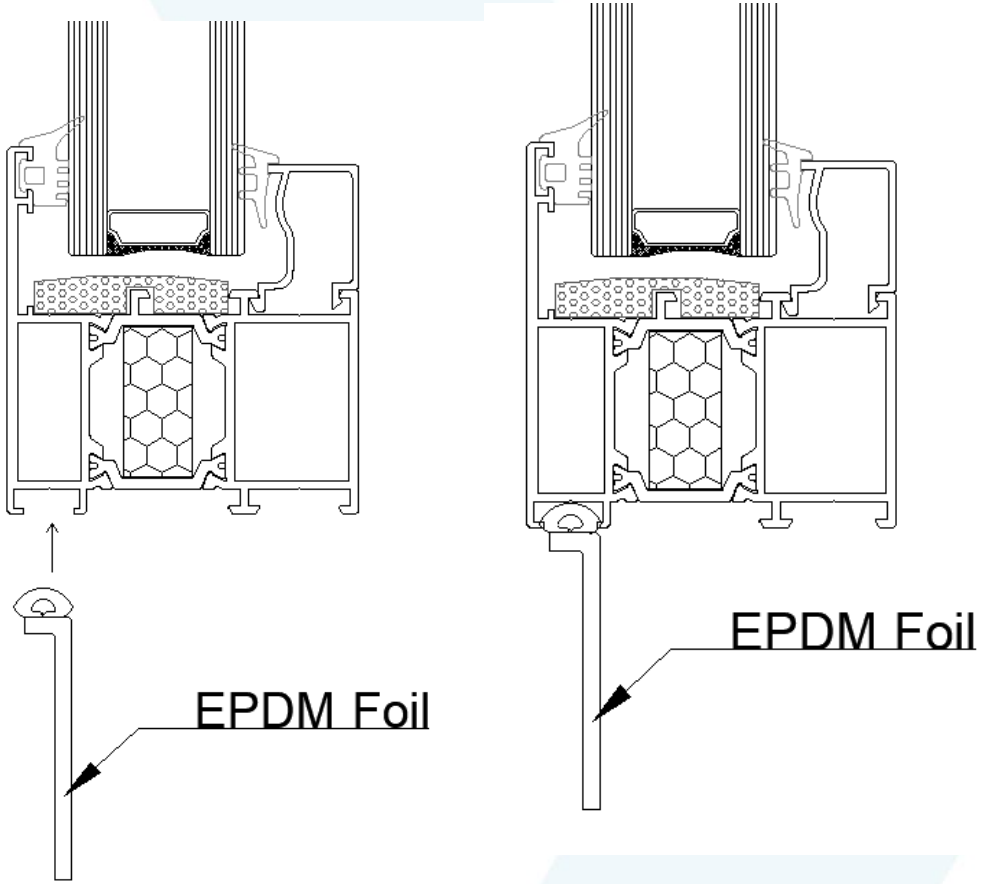

STEP 4 Seal The EPDM Foil To The Wall

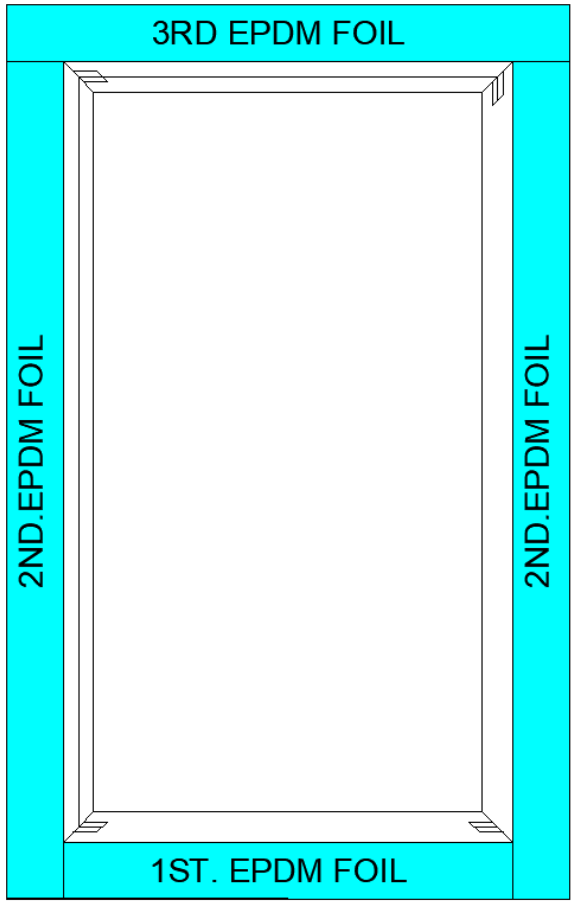

Installation sequence:

1. 1st - Bottom
2. 2nd - Sides Overlap Bottom
3. 3rd - Top Overlaps Sides

Recommended Glue: Illbruck CT113.

Attention! The EPDM foil must be sealed in the way described above!
In the case of improper installation, there is a risk of water penetration.

STEP 5 Install Frame To Wall – Vertical Cross-Section (Fixed Window)

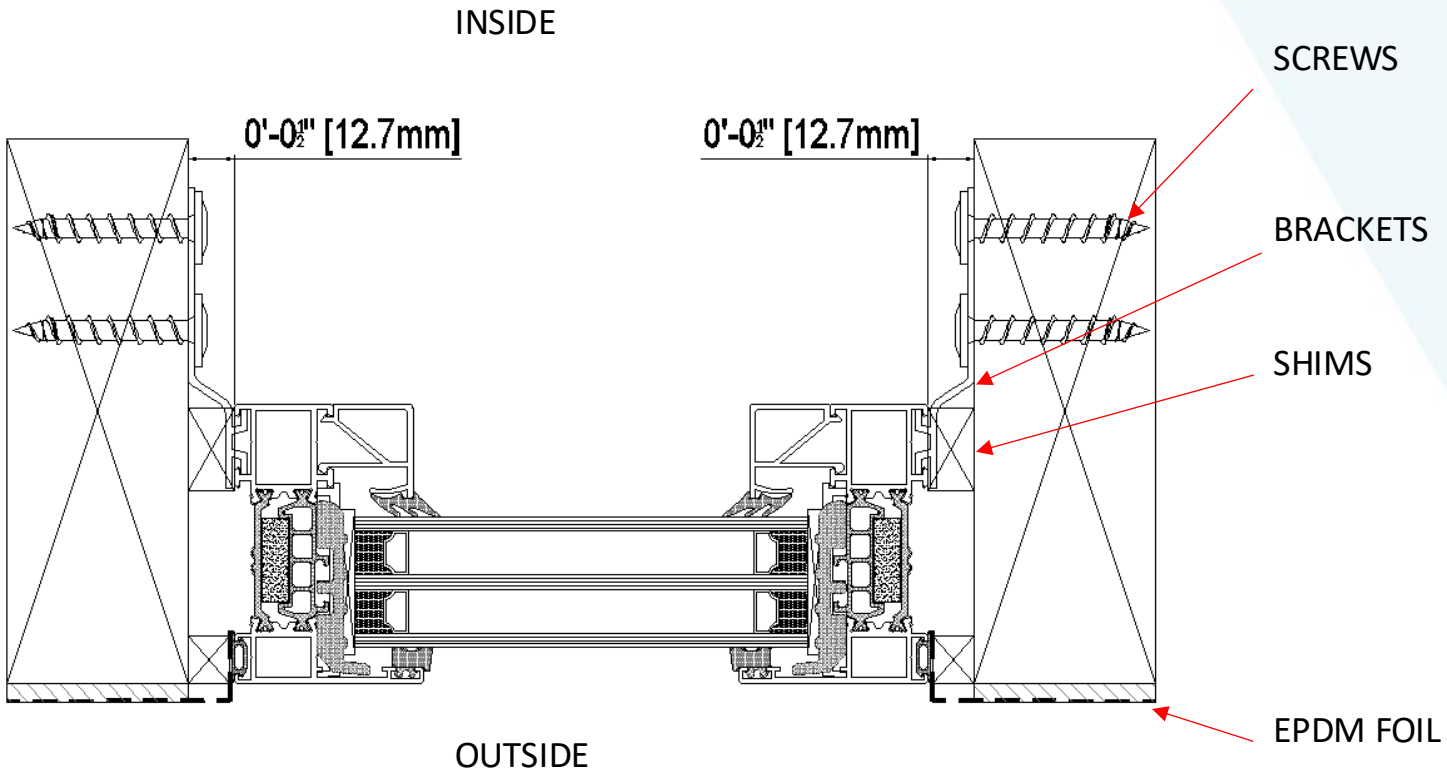

1. Insert the frame into the opening.
2. Pre-set the frame and block it with shims. Adjust with wedges and make sure that frame is level in all directions.
3. By using spirit level, check the vertical and horizontal correctness.
4. Check whether the diagonals of the frame are the same – as they should be.
5. Set brackets and screw to the wall.
6. Check the frame dimensions. If frame has been overtightened, loosen the screw, add spacer and tighten screw.

STEP 5 Install Frame To Wall – Horizontal Cross-Section (Fixed Window)

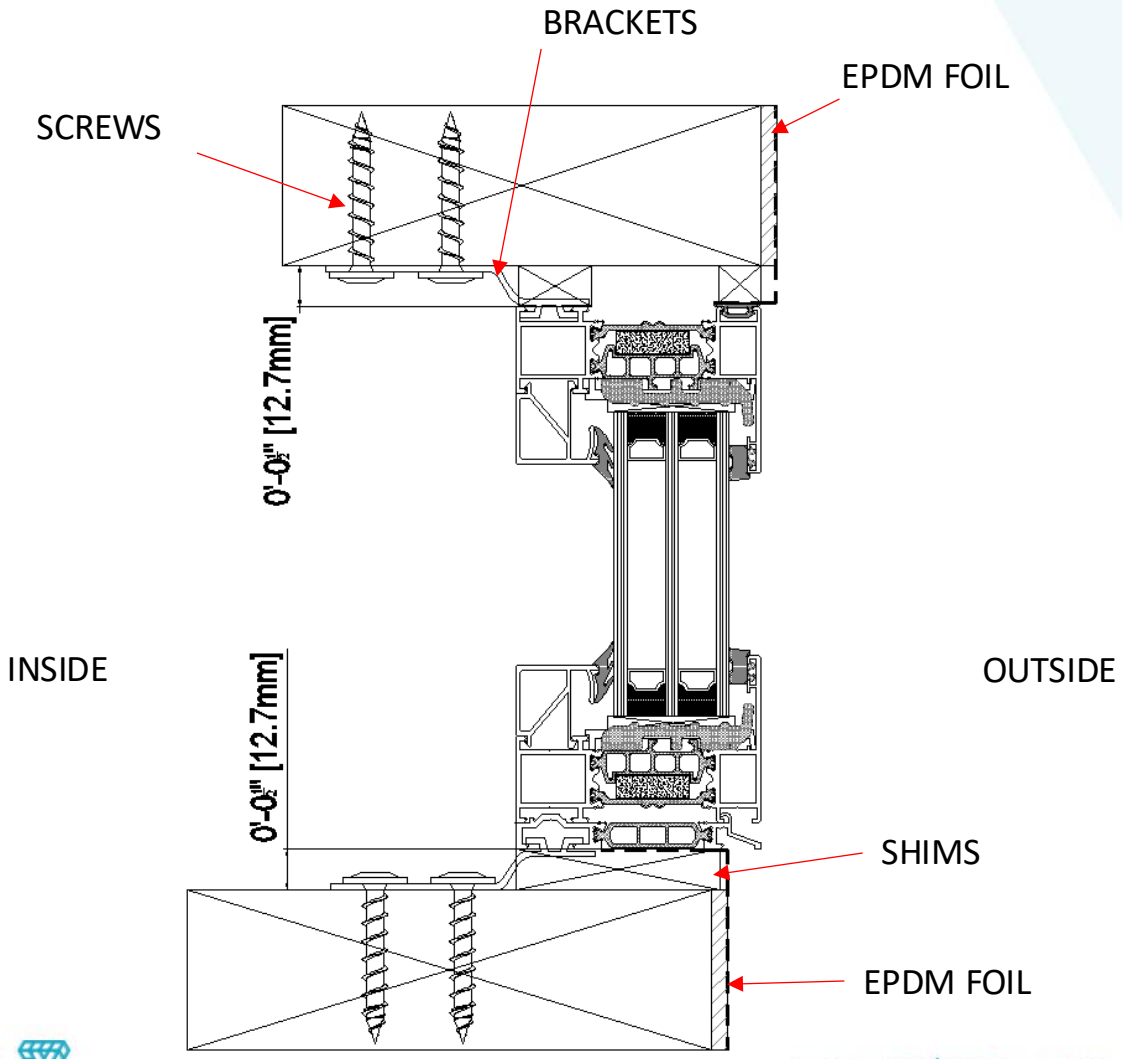

1. Insert the frame into the opening.
2. Pre-set the frame and block it with shims. Adjust with wedges and make sure that frame is level in all directions.
3. By using spirit level, check the vertical and horizontal correctness.
4. Check whether the diagonals of the frame are the same – as they should be.
5. Set brackets and screw to the wall.
6. Check the frame dimensions. If frame has been overtightened, loosen the screw, add spacer and tighten screw.

STEP 6 Gluing Under Glass Gasket

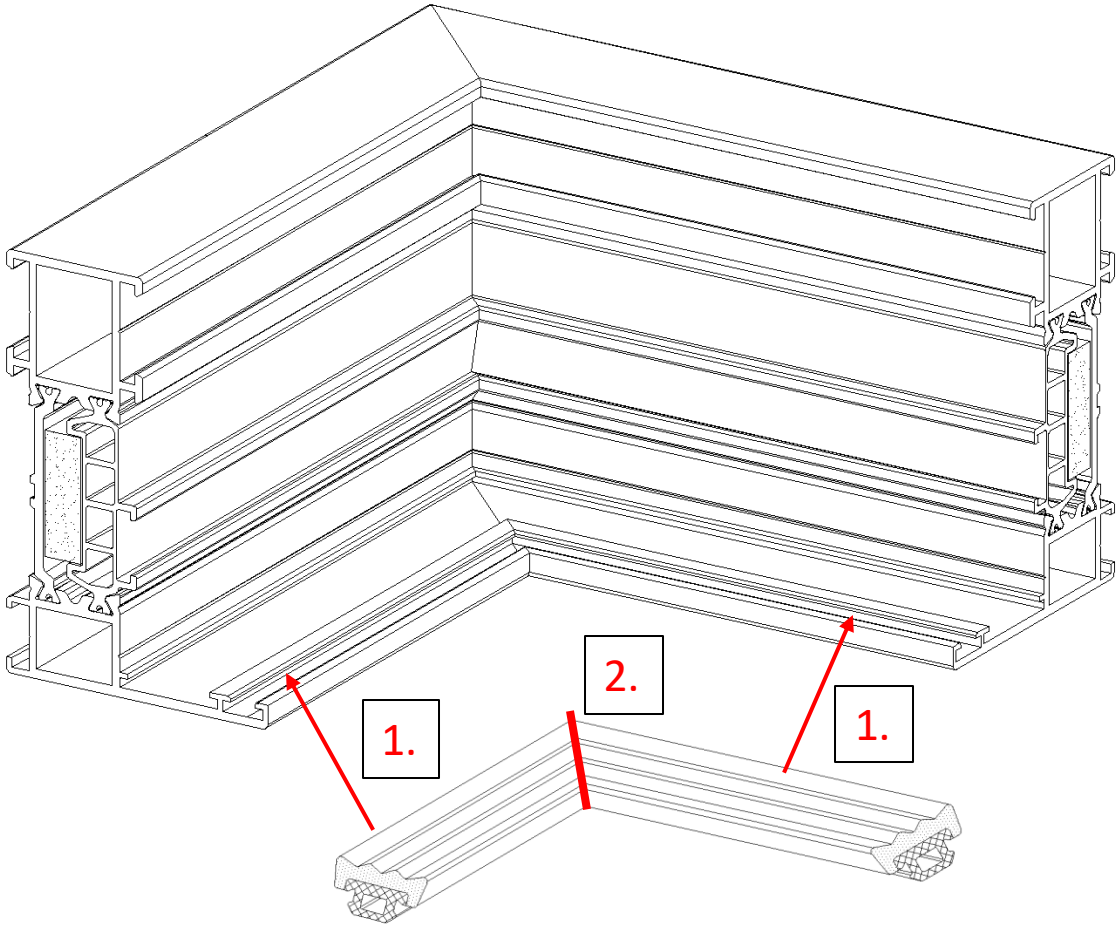

After corner joint of profile take these steps:

1. Put under-glass gasket to nest.

2. Glue surface of the under-glass gasket using Teroson gasket glue or black UV resistant caulking eg DC995.

STEP 7 Replacing The Glass

1.Cut the silicone around the perimeter of the glass.

2.Remove the glass.

3.Cut the silicone loose with special cutter of knife.

4.Clean the frame with: R40 cleaner.

STEP 8 Install Glass And Place Shims In Correct Location

Put glass into frame, next use the shims.

Turn & Tilt Window

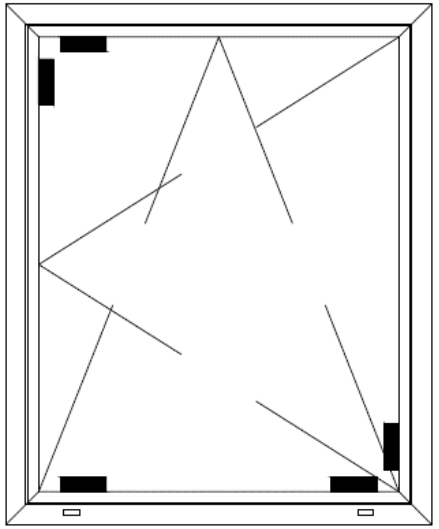

Fixed Window

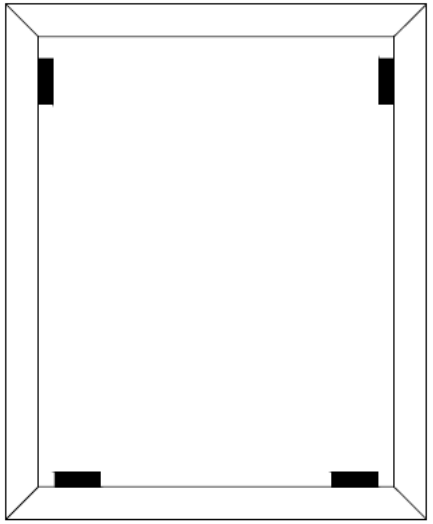

Combined Window

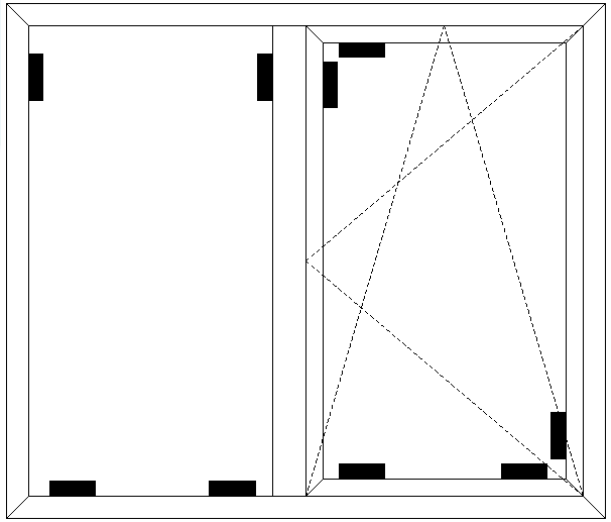

The middle of shims should be 150 mm / 6” from the corner of the frame.

IMPORTANT! Shims shouldn’t be placed on drainage hole.

STEP 9 Sealing Glass To The Frame

Seal the glass from the inside (where the glazing beads are)

FIX WINDOW

1. Cut the shims and foams

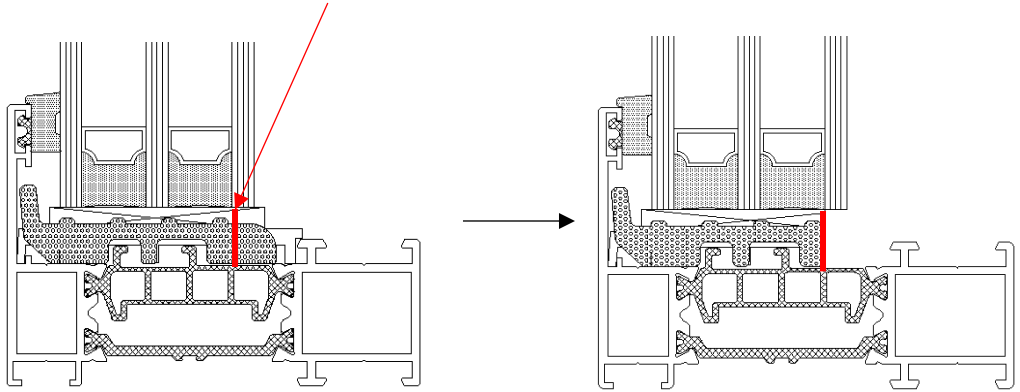

2. Apply the silicone - see next page

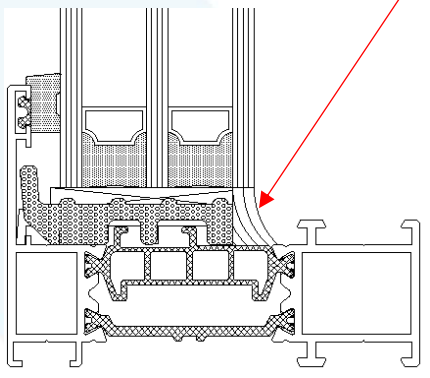

OPERABLE WINDOW

1. Cut the shims and foams

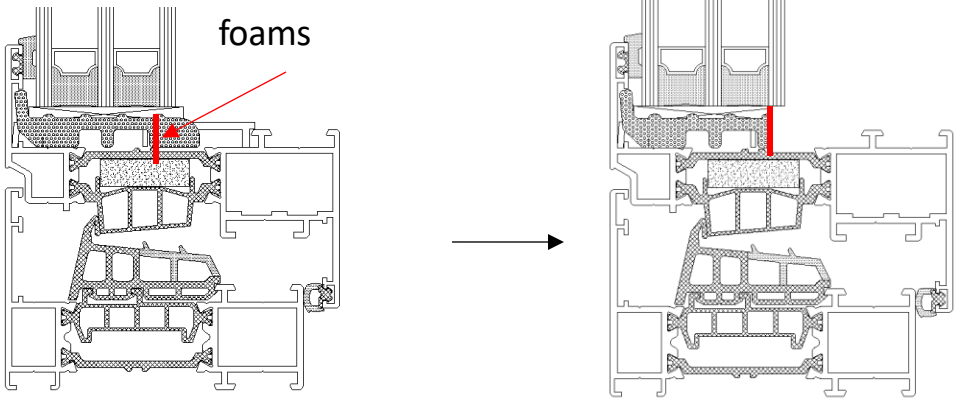

2. Apply the silicone - see next page

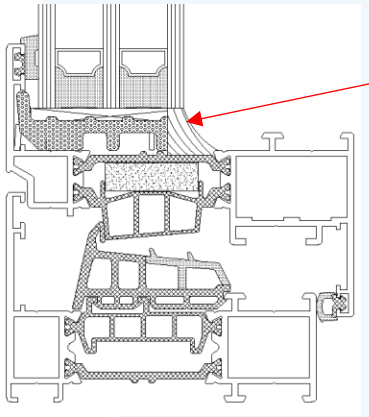

STEP 10 Sealing Glass To The Frame

Seal the glass from the inside (where the glazing beads are)

1. Clean the surface of the aluminum profile with isopropyl alcohol cleaner.

Apply primer on the cleaned surface.

2. Clean the surface of the glass with isopropyl alcohol cleaner.

Apply primer on the cleaned surface.

IMPORTANT! After sealing, window must rest for at least 72 hours in horizontal position.

3. Put on foam seal between glass and aluminum profile on all profile circumference.

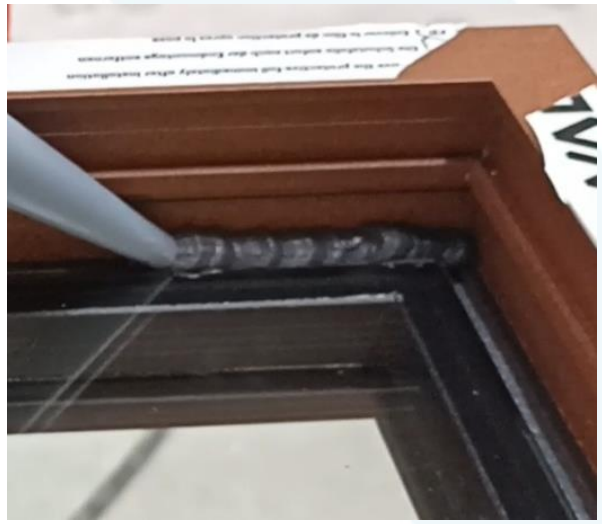

4. Fill the remaining space using structural glue on glass circumference.

Recommended Glue: DowSill 776 instafix or SikaSil WT-480

5. Remove the protruding part of the glue.

Attention! Foam seals and glue must be used on the entire circumference.

STEP 11 Install Glazing Beads

Install the glazing beads.

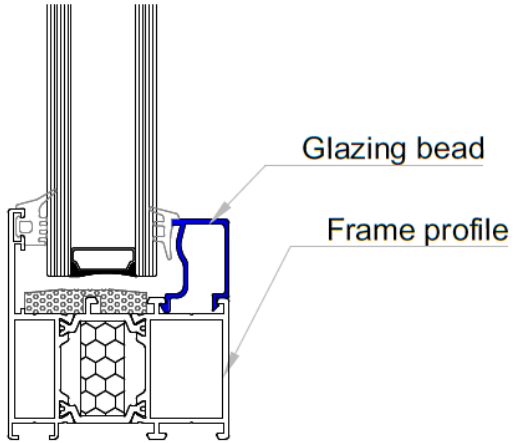

Attention: After glazing, all stickers must be taken off to avoid discoloration.

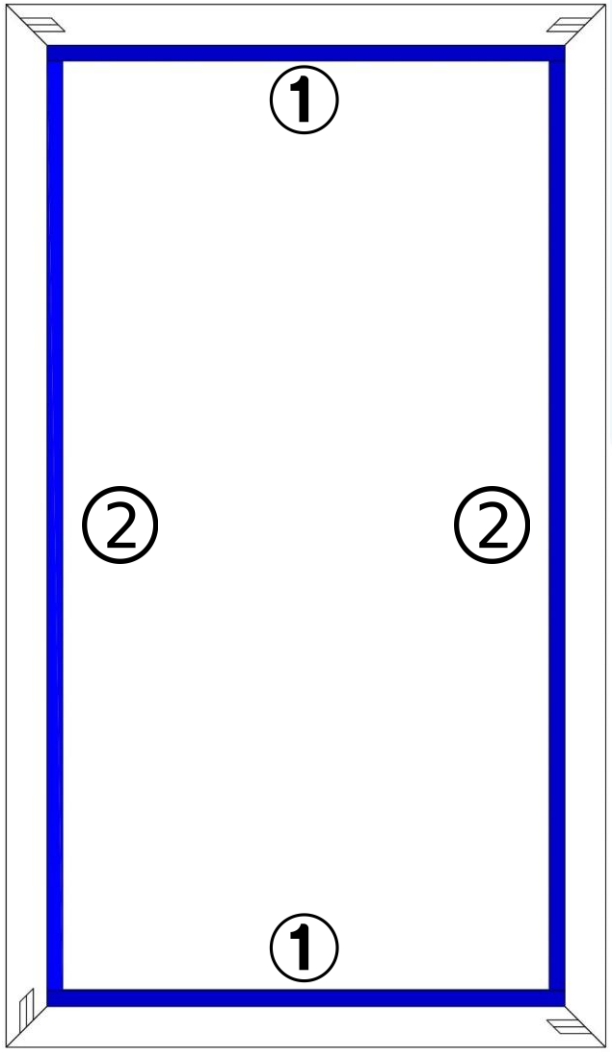

1 **First install horizontal glass beads**

2 **Second install vertical glass beads**

STEP 12 Install Weather Strips

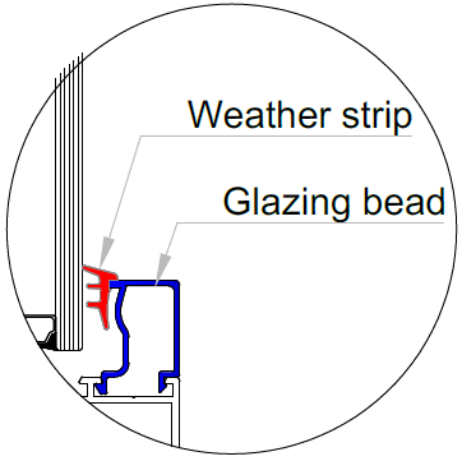

Weather strip must be cut 5-10% longer than the glass beads and the edges of the weather strip must be cut under 45º angle.

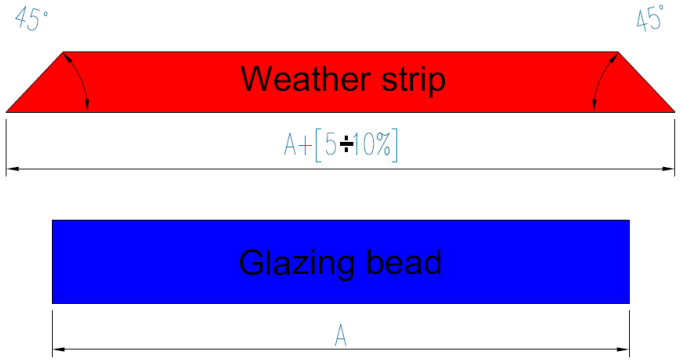

Gaskets should be installed to press the glass but not to push 2-3" all the way through for 72h to bring air to dry the glue (if the glass was sealed).

After 72 hours, push the gaskets all the way in.

STEP 13 Reinforcement Assembly

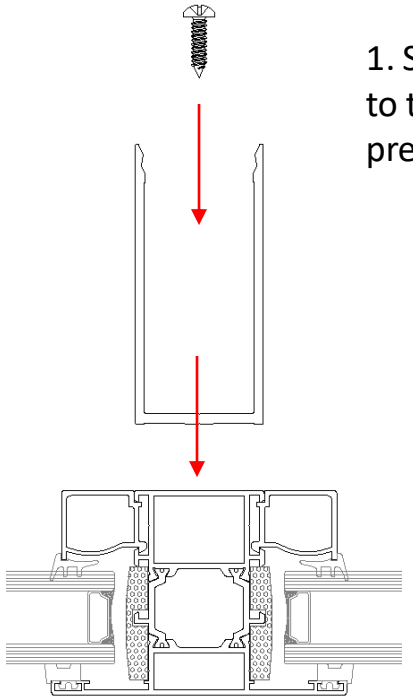

1. Screw the reinforcement to the mullion. Holes prepared by fabrication.

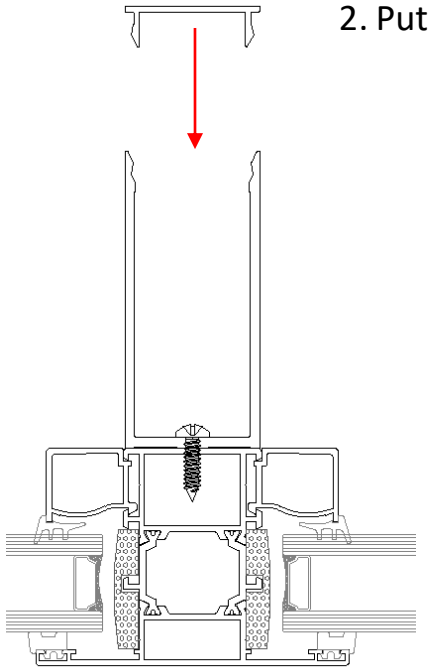

2. Put on the beauty cap.

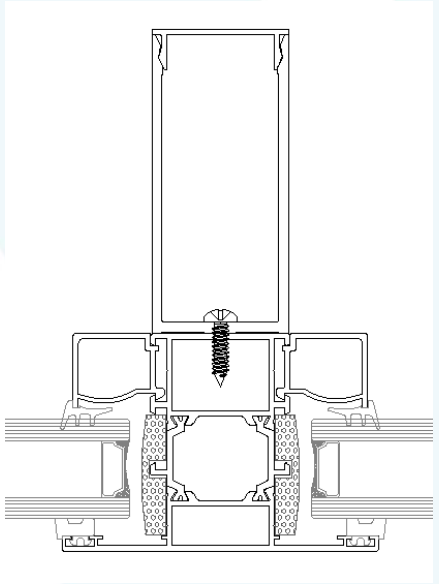

Final View

STEP 14 Install Operable Window Sash

1. Open the bottom hinge.

2. Place the window on the hinge.

STEP 14 Install Operable Window Sash

View of A Well-Mounted

3. Open the top hinge.

4. Press 2 pins into the leaf hinge.

5. Close the hinge lock.

STEP 15 Handle Installation

Fork Handle

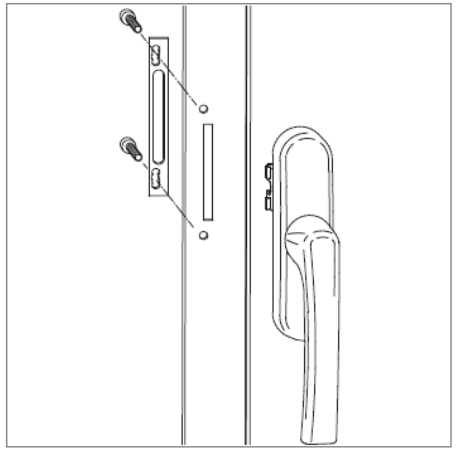

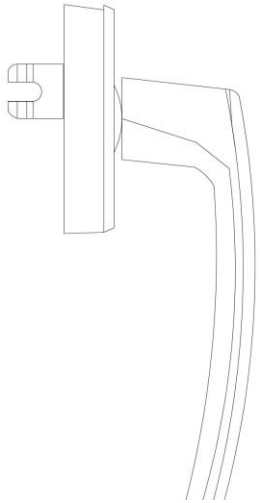

- Set the fork in proper position in the handle
- Lift the cover of the handle escutcheon and turn it by 90° (at 90° fork should be in the middle)
- Place the handle to the turn position (90°)
- Insert the handle and mount it with 2 screws [B]

IMPORTANT! Handle installation should be done in turn position of the window.

STEP 15 Handle Installation

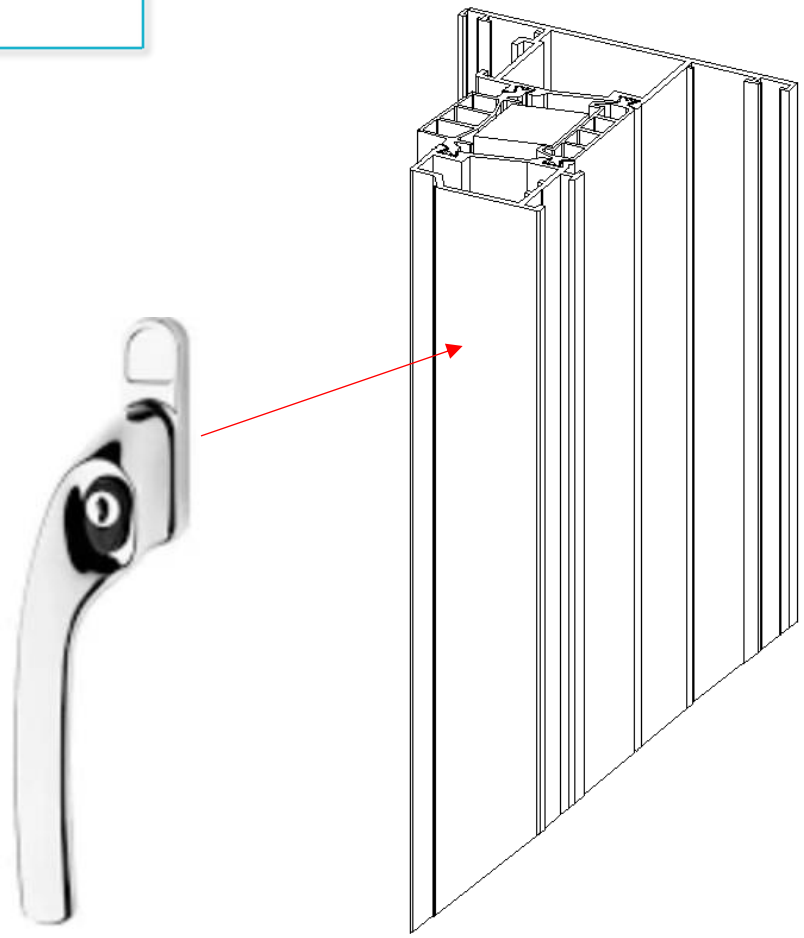

1. Screw the handle to the sash.

Mounting holes prepared by the fabricator. Be careful during installation – do not scratch the sash.

IMPORTANT! Handle installation should be done in closed position of the window.

STEP 16 Spindle Handle

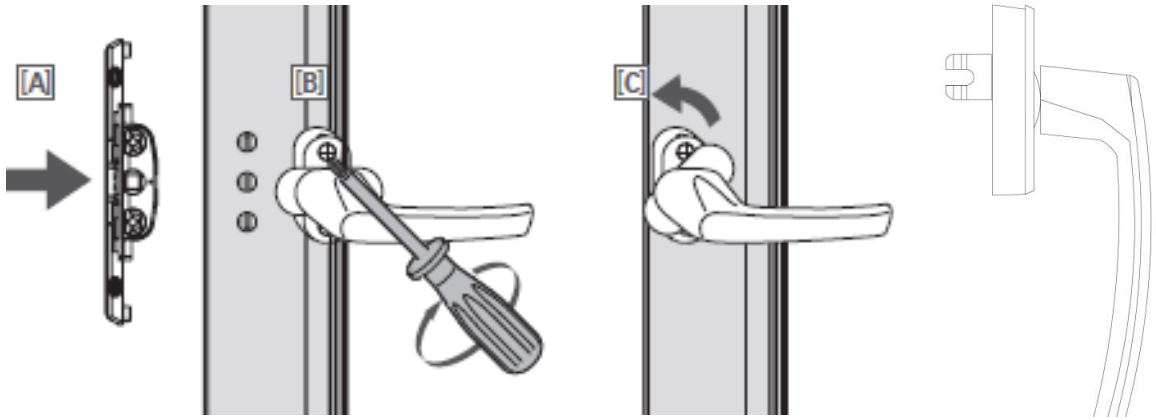

- Handle mechanism place in its designated opening, as shown in figure [A]
- Place the handle to the open position (90°)
- Lift the cover of the handle escutcheon and turn it by 90°
- Insert the handle and install it with 2 screws [B]
- Turn the rosette cover [C] back 90°

Standard Handle Operation

Sash in closed position (1)

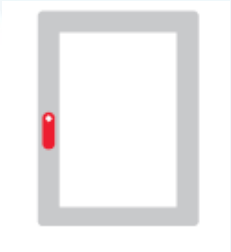

Sash in turn position (2)

Sash in tilt position (3)

Tilt first Handle Operation

Sash in closed position (1)

Sash in tilt position (2)

Sash in turn position (3)

STEP 17 Cam Adjustments

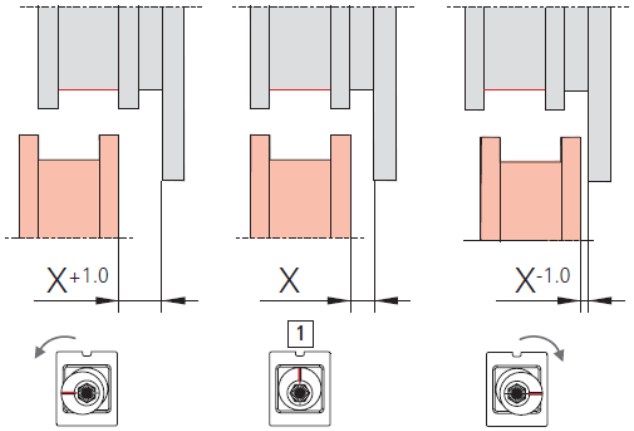

- When the locking cam is in the neutral position [1], the notch points towards the recess.
- Turn the cam anticlockwise to reduce the gasket compression. This increases the distance between the sash and frame by 1.0 mm [3/64”].
- Turn the cam clockwise to increase the gasket compression. This reduces the distance between the sash and frame by 1.0 mm [3/64”].

Scan QR Code For Details

STEP 18 Standard Hardware

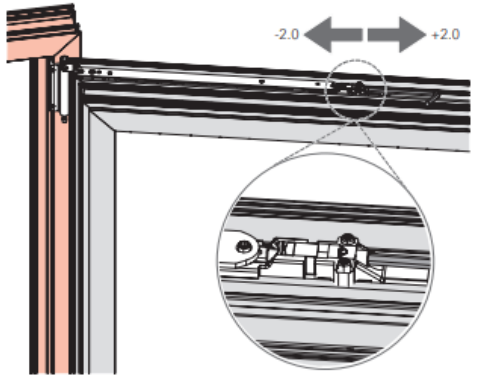

Lateral adjustment

Adjusting the sash stay:

Open the window sash.

Lateral adjustment ±2 mm with 4 Allen key.

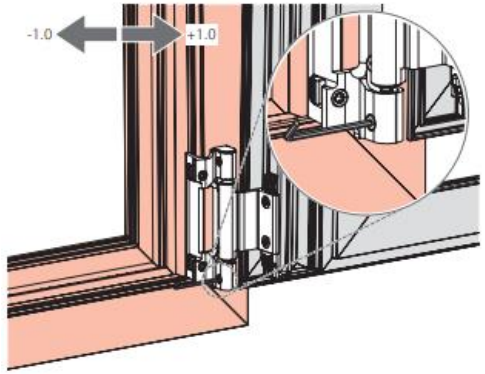

Adjusting the pivot rest

Before adjustment – remove the load on the sash and protect it from falling down.

Open the window sash.

Lateral adjustment ±1 mm using screw in the pivot rest with 2.5 allen key.

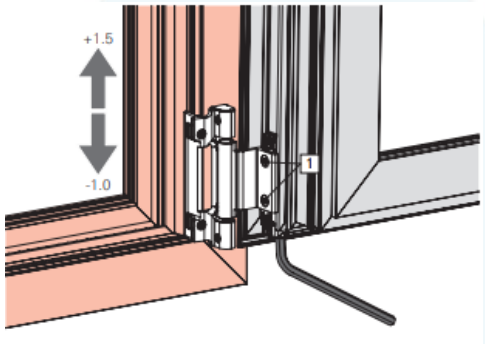

Height adjustment

Before adjustment – remove the load on the sash and protect it from falling down.

Undo the clampable corner bracket on the corner hinge (loosen the screws [1] by one turn).

Undo the screws on the hinge side of all T-O hinges.

Open the window sash.

Height adjustment on the corner hardware bracket +1.5 mm / -1 mm with 4 allen key.

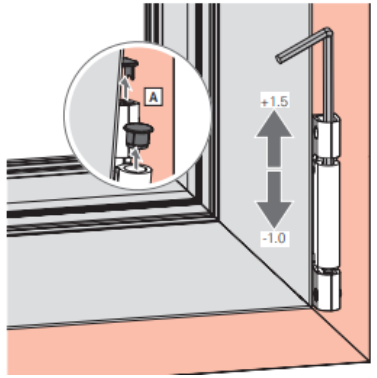

Adjusting the corner hinge

Tilt the window sash and remove the cap on the pivot rest and corner hinge [A].

Return the window sash to the closed position.

Height adjustment using bearing in the hinge ±1.5 mm with 4 allen key.

Tilt the window sash and fit the cap on the pivot rest and corner hinge.

Scan QR Code For Details

STEP 19 Concealed Hardware

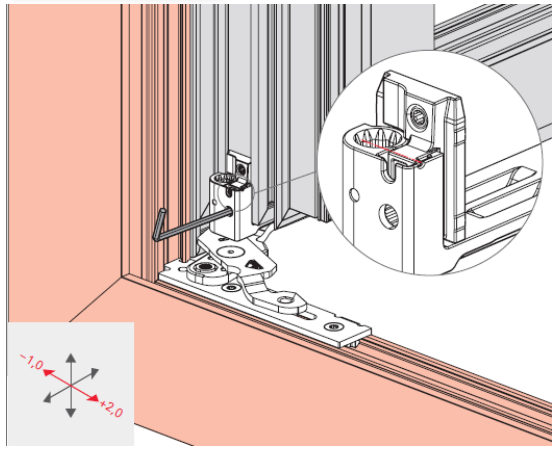

Horizontal sash adjustment on the hinge

Open the sash to 90°.

Horizontal adjustment +2 mm / -1 mm with 4 allen key.

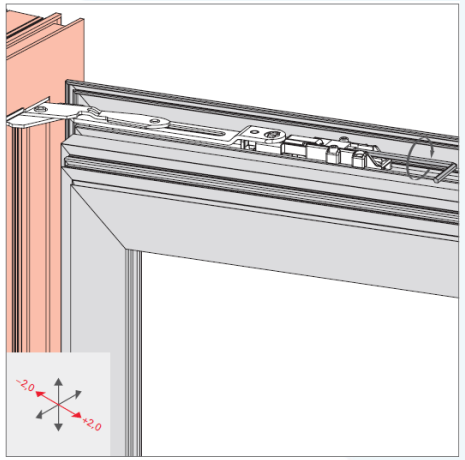

Horizontal Sash Adjustment

Open sash to 90°.

Horizontal adjustment ±2 mm with 4 allen key.

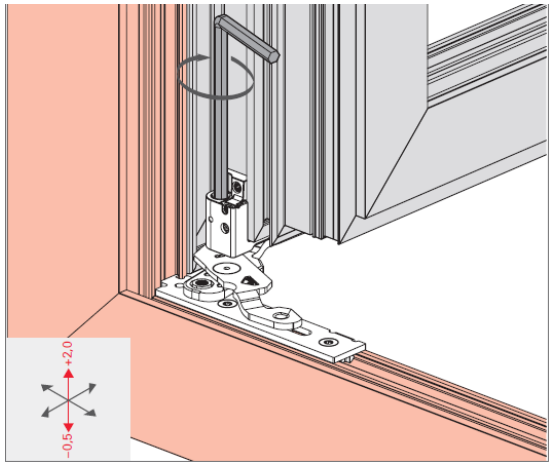

Vertical adjustment of the sash on the bottom hinge

Open sash to 90°.

Vertical adjustment +2 mm / -0.5 mm with 4 allen key.

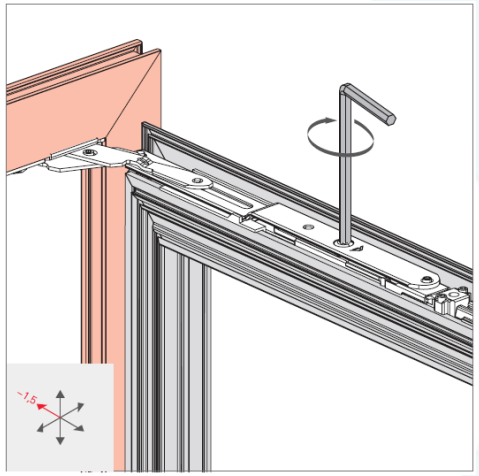

Horizontal Sash Adjustment

Open the sash to 90°.

Horizontal adjustment -1.5 mm with 4 allen key

STEP 19 Concealed Hardware

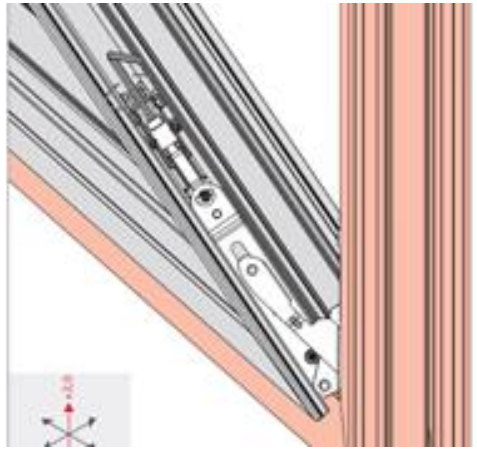

Vertical adjustment of the sash

Move sash to tilt position.

Vertical adjustment ±2 mm with 4 allen key.

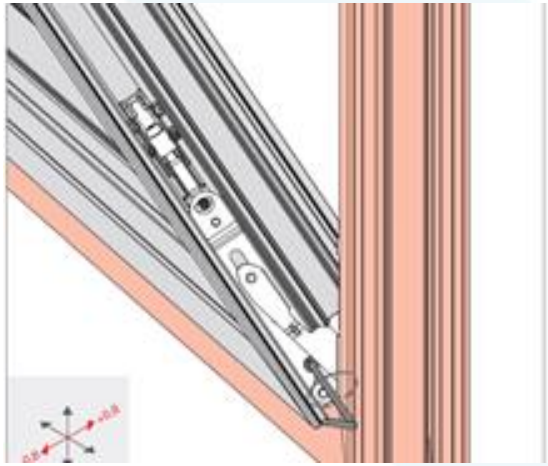

Compression adjustment

Move sash to tilt position.

Clamping force adjustment ±0.8 mm with 4 allen key.

Scan QR Code For Details

STEP 1 Installation Of The Turn Restrictor With Stop

For an opening angle of 94°, break either the right or left leg of the turn restrictor frame component before installation.

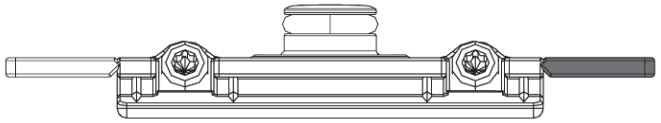

Maximum opening width for the turn restrictor: approx. 90°

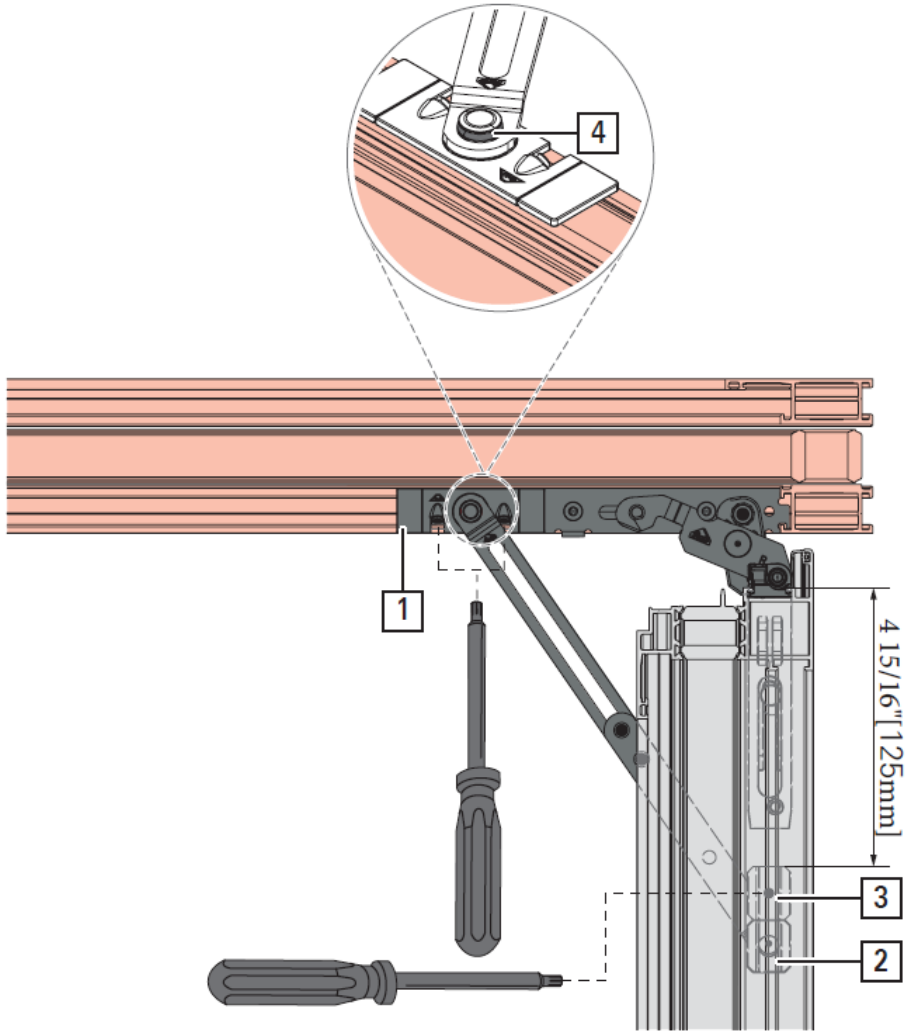

1. Position the frame bearing [1] in the frame groove directly adjacent to the pivot rest and fasten with two pre-assembled threaded pins so that it is at least flush.
   Tool: T10 hexalobular socket
   Torque: 2 – 2.5 Nm
2. Insert the sash bearing [2] in the sash groove and position it.
3. Insert the stop [3] in the sash groove, position it and fasten it with the preassembled threaded pin.
   Tool: T10 hexalobular socket
   Torque: 2 – 2.5 Nm
4. Push the turn restrictor arm above the rubber ring [4] on the frame bearing swivel pin.

STEP 2 Installation Of The (Braked) Turn Restrictor

1. Position the sash support in the sash groove and secure with screws.

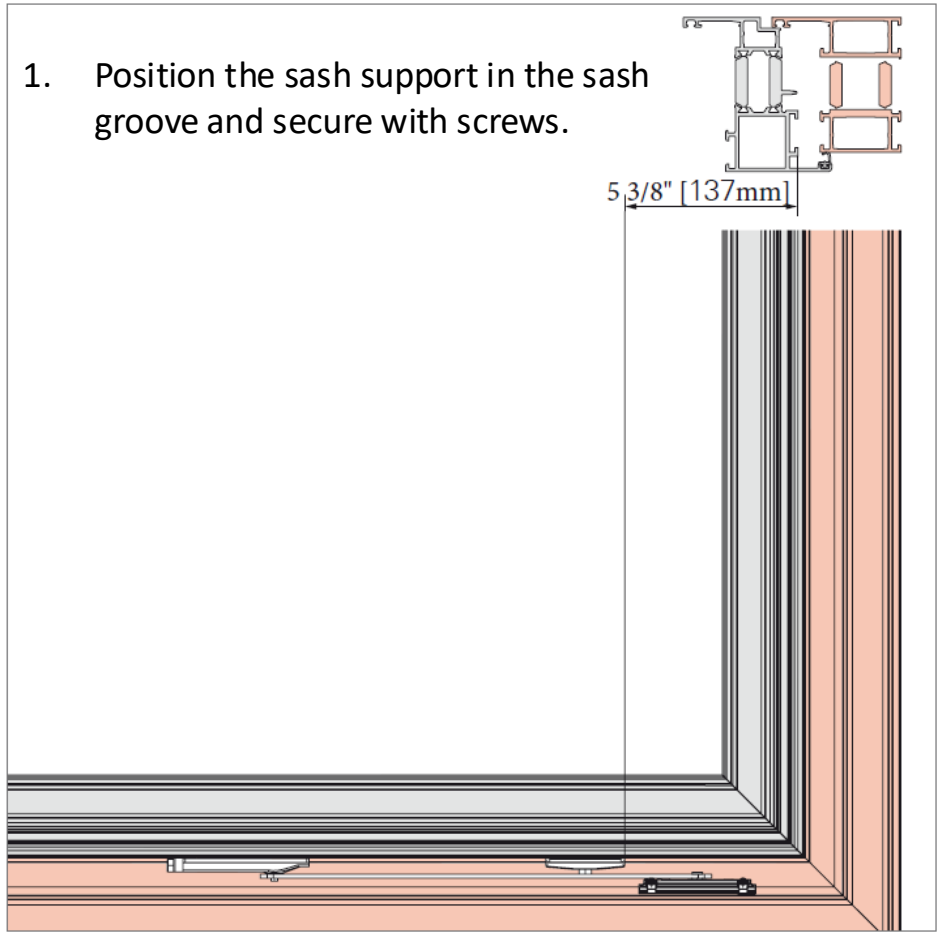

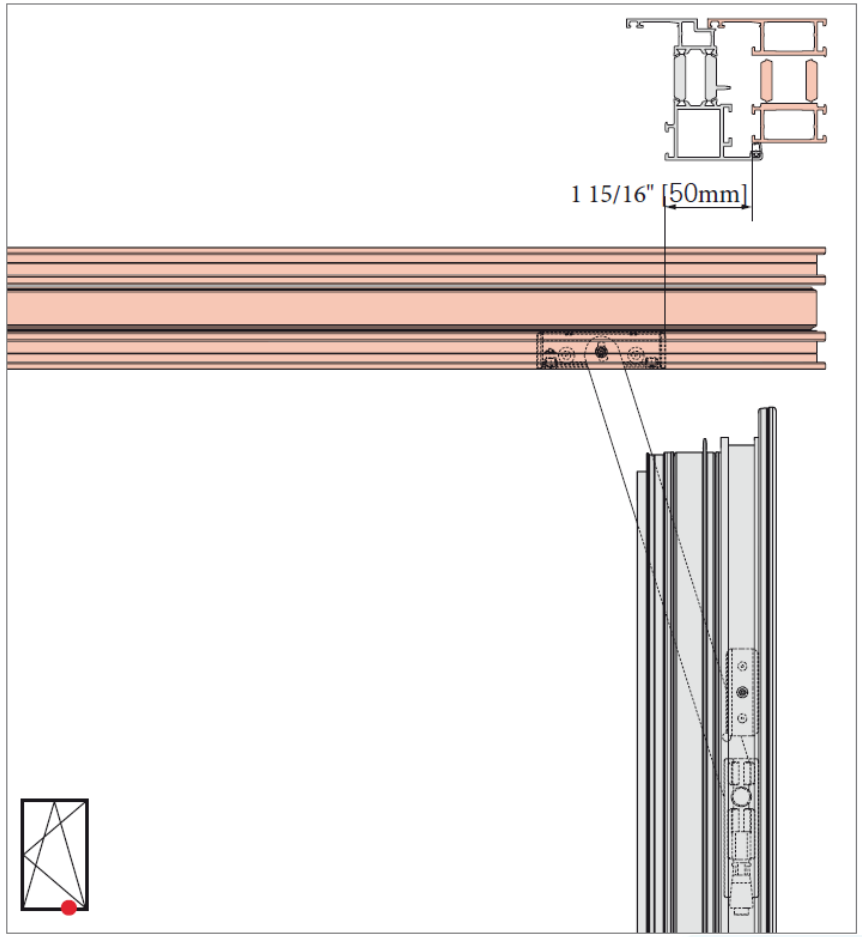

2. Screw threaded screws onto the frame support so that they are at least flush.
3. Guide the swivel pin for the frame support through the turn restrictor arm.
4. Lock the connection (between the rotating arm and frame support) by turning the cam 180° using hex key size 4.

Note: After installation, the brake must be adjusted with hex key size 4.

STEP 20 Applying SDL Bars

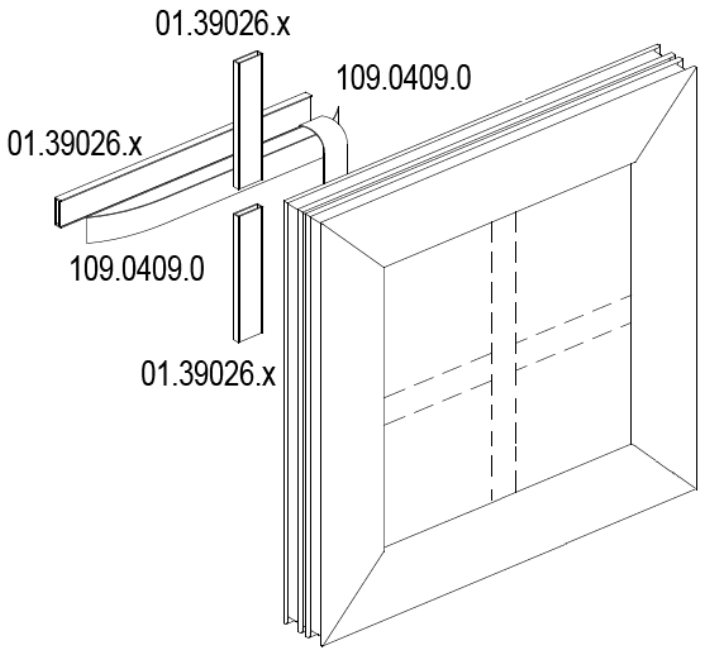

Attention: Applying SDL BARS must be done only after installing window in the wall opening, glazing and proper glass shimming.

<u>During designing the windows/doors with SDL bars please have in mind location of the windows and doors on elevation of the building to line up and match the SDL's in different partitions</u>.

- Clean surfaces before applying using isopropyl alcohol. Cleaning should always be carried out in one direction. Allow to evaporate for a minimum of 30 seconds.
- Apply a thin layer of cleaner on powder coated surface of SDL bars. Allow to evaporate for a minimum of 5 minutes. Do not touch the prepared surface with your fingers.
- Apply tape to previously prepared profile surface.
- Put additional layer of cleaner on the glass pane (at ambient temperature) and wipe to dry without any blurs. Do not touch the prepared surface with your fingers.
- Apply profile with the tape to glass pane and pressing with a roller (within 5 minutes after application of the cleaner).
- Apply SDL bars - expansion gaps should be left between SDL bars.
- In regards to differences in thermal expansion between aluminum and glass, maximum length of SDL bars should not exceed 2500mm [100"]
- Minimum temperature for applying SDL bars is 15°C [59 °F]
- When using glass with functional coating, e.g. self-cleaning, applying SDL bars consult with Yawal USA.

STEP 23 Straight Frames Connection

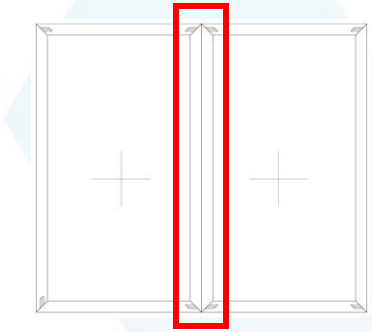

Distance between each screw should be x = max. 300mm (12”)

Attention! Every screw must be stainless steel or galvanized.
Every hole must be sealed by using silicone sealant.

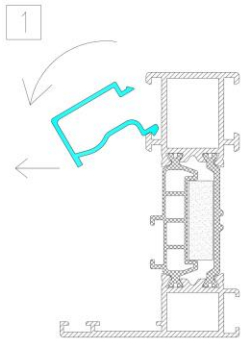

1. First take off the glazing beads from the frame profile.

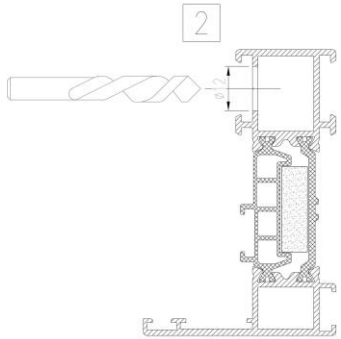

2. Drill the hole under the taken glazing beads (drill bit diameter 12mm [15/32”]).

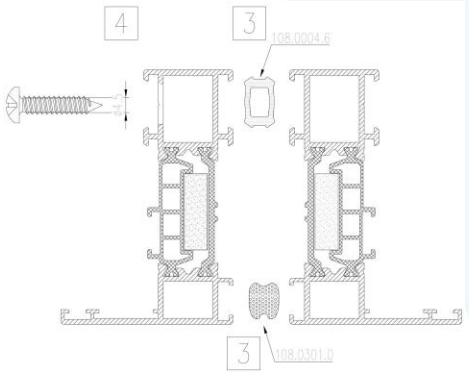

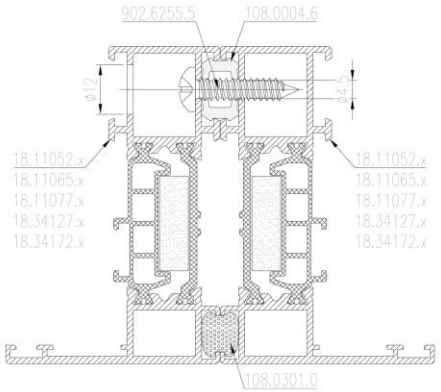

3. Put the seals between both frame profiles.

4. Screw the frames together.

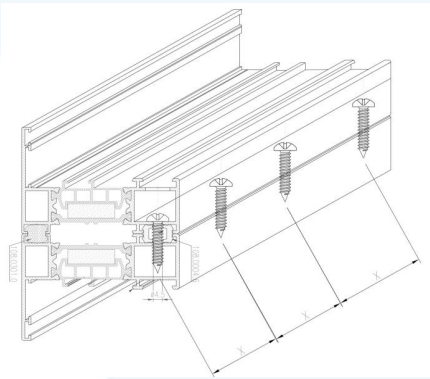

STEP 23 Straight Frames Connection

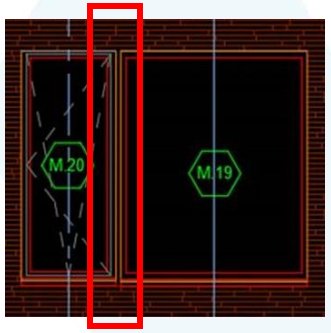

Distance between each screw should be x = max. 300mm (12”)

Attention! Every screw must be stainless steel or galvanized.
Every hole must be sealed by using silicone sealant.

1. First take off the glazing beads from the frame profile (fixed window).

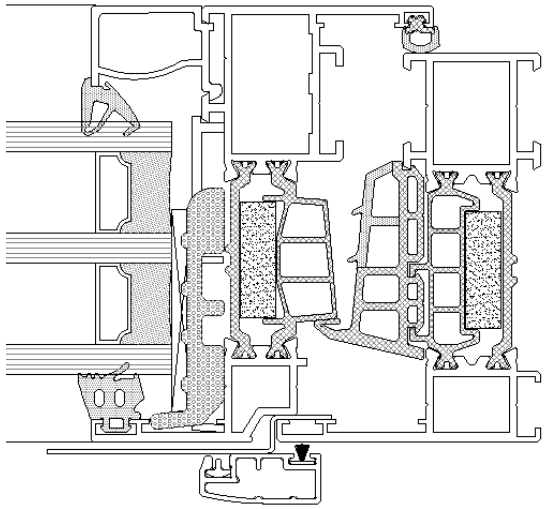

DAW Window

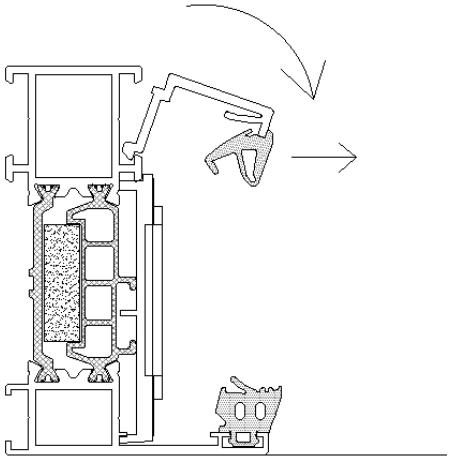

FIX Window

2. Drill the hole under the taken glazing beads (drill bit diameter 12mm [15/32”]) (fixed window).

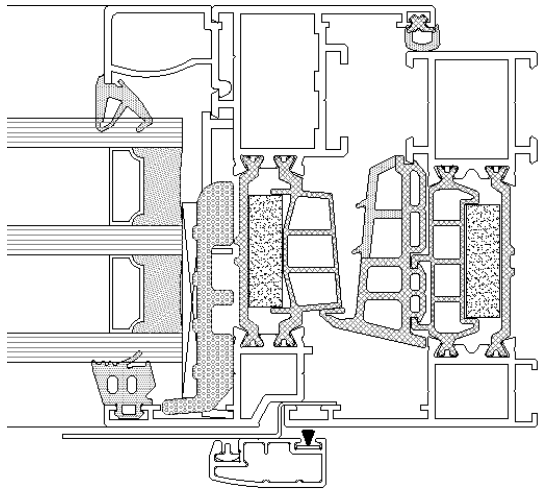

DAW Window

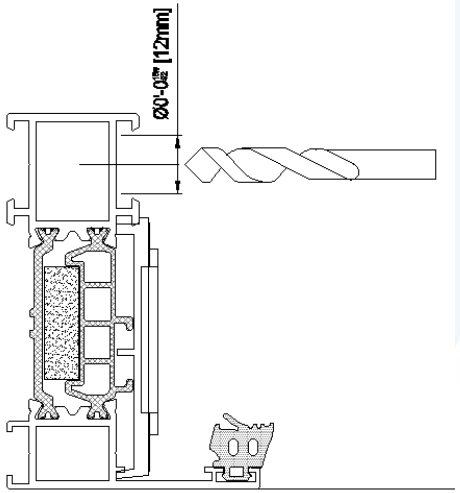

FIX Window

STEP 23 Straight Frames Connection

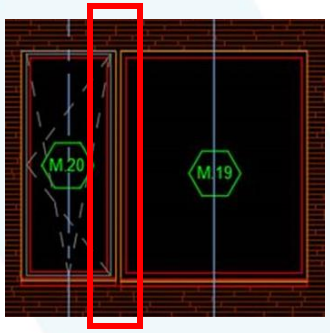

Distance between each screw should be x = max. 300mm (12”)

Attention! Every screw must be stainless steel or galvanized.
Every hole must be sealed by using silicone sealant.

3. Put the seals between both frame profiles.

4. Screw the frames together (fix window).

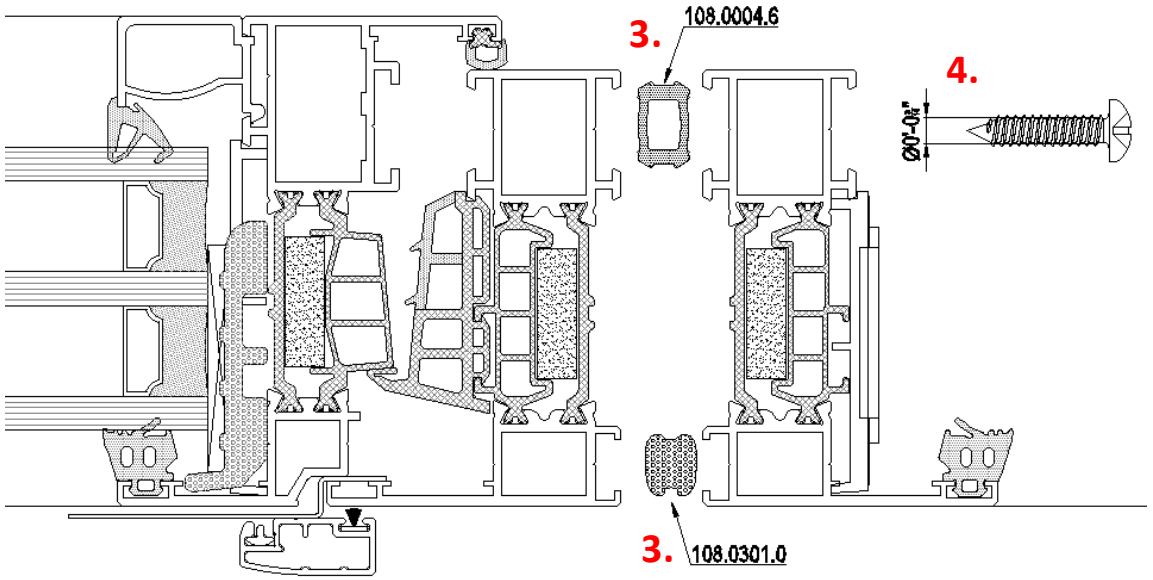

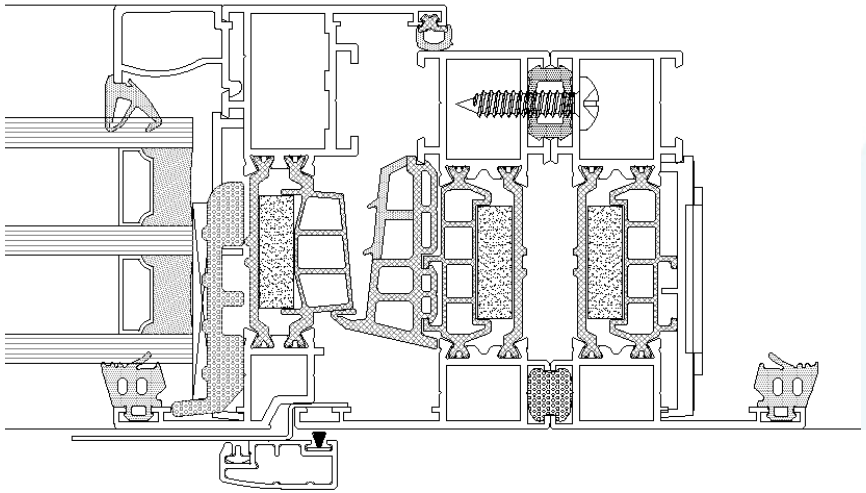

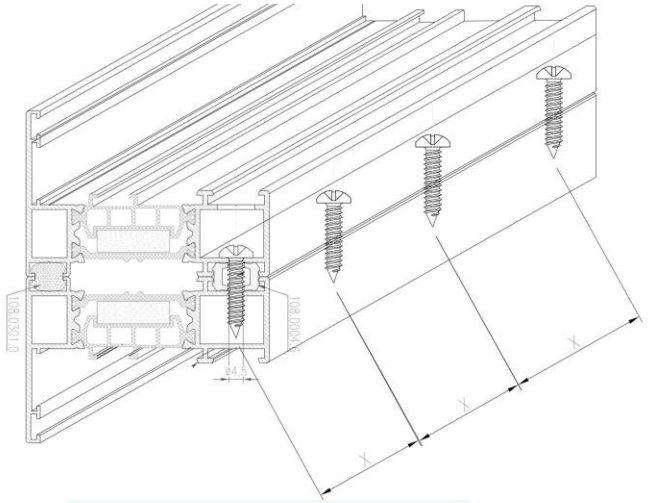

STEP 24 Windows Connection At 90º Angle

Before installation it is necessary to remove the sash.

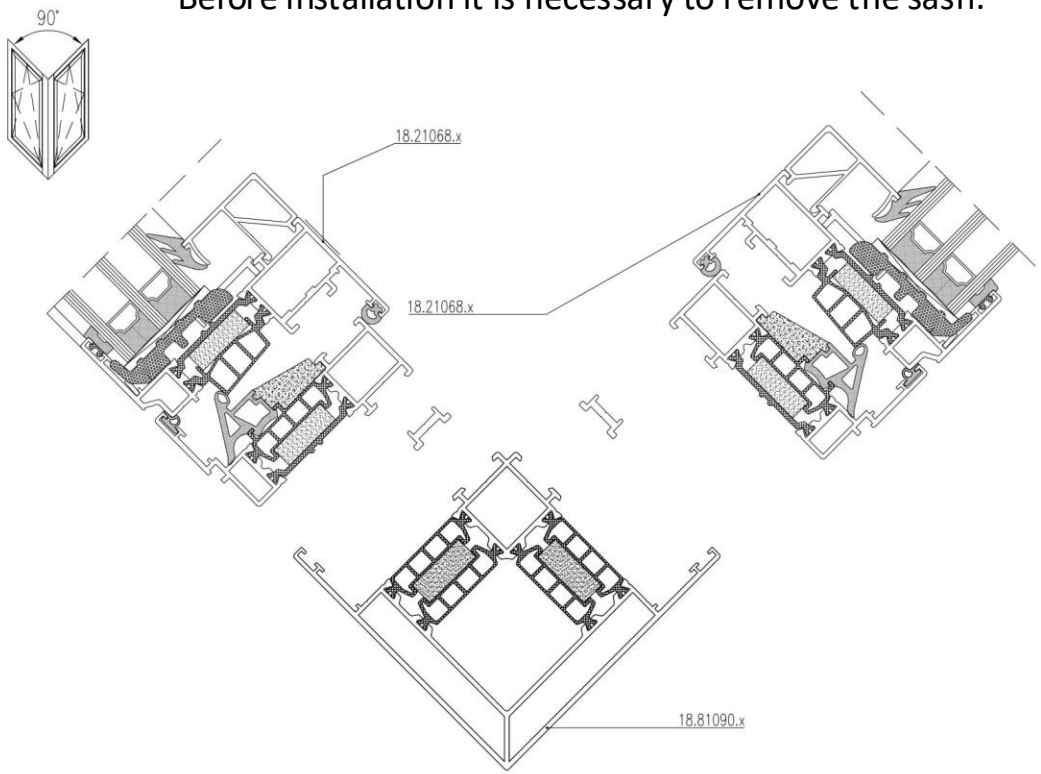

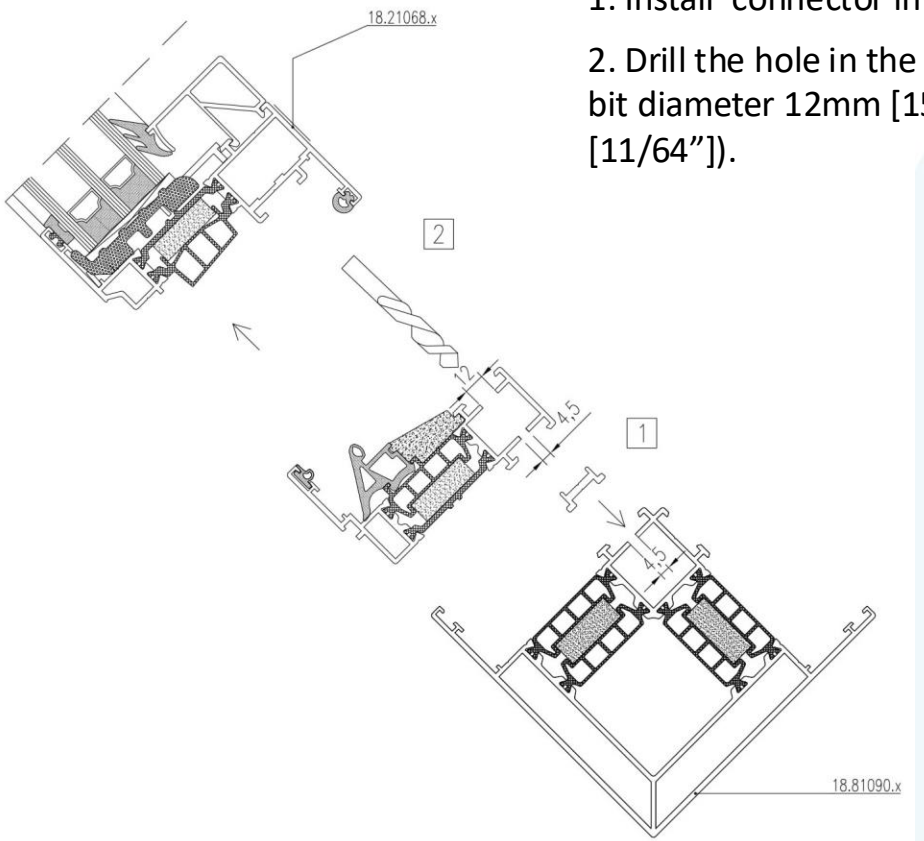

1. Install connector in the corner post.
2. Drill the hole in the first frame (drill bit diameter 12mm [15/32”] and 4,5mm [11/64”]).

STEP 24 Windows Connection At 90º Angle

Now that the first side of the corner window is ready to assemble in the wall, install the second side of the corner window.

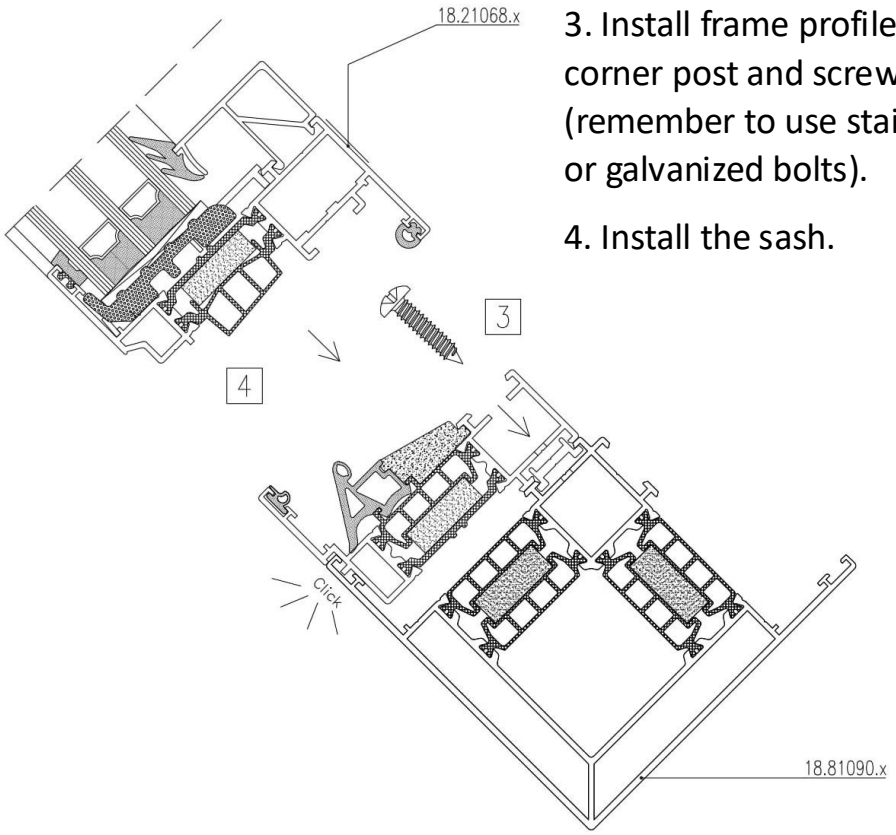

3. Install frame profile with the corner post and screw it together (remember to use stainless steel or galvanized bolts).

4. Install the sash.

5. Install the connector in the corner post.

6. Drill the hole in the first frame (drill bit diameter 12mm [15/32”] and 4,5mm [11/64”]).

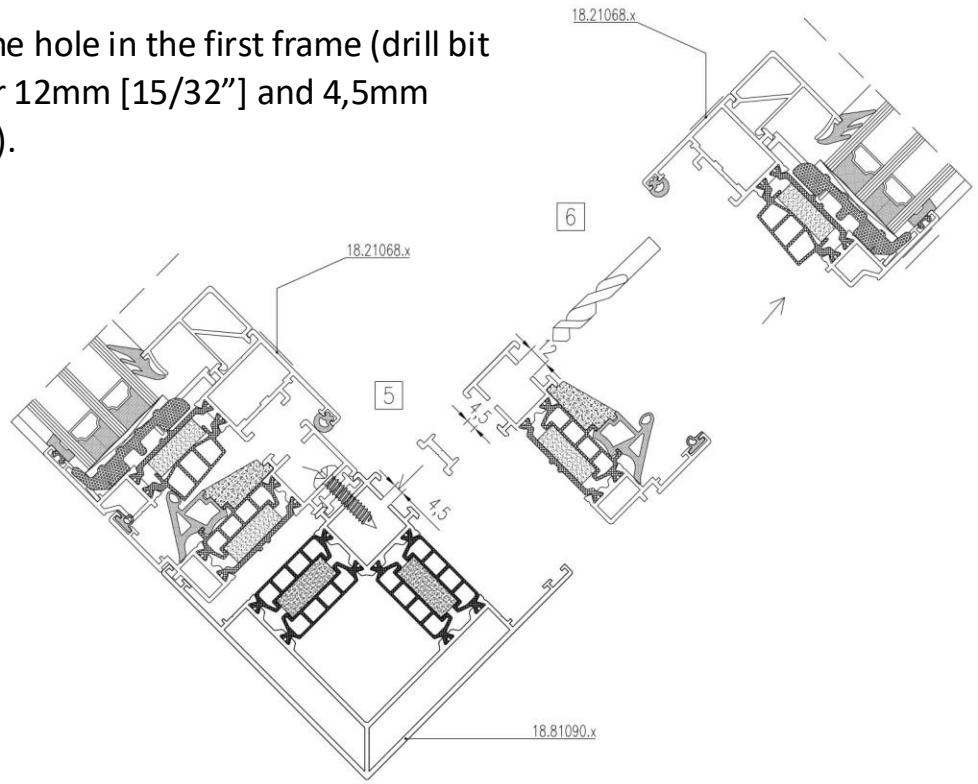

STEP 24 Windows Connection At 90º Angle

7. Install frame profile with the corner post and screw it together (remember to use stainless steel or galvanized bolts).

8. Install the sash.

Attention! Every hole must be sealed by using silicone sealant.

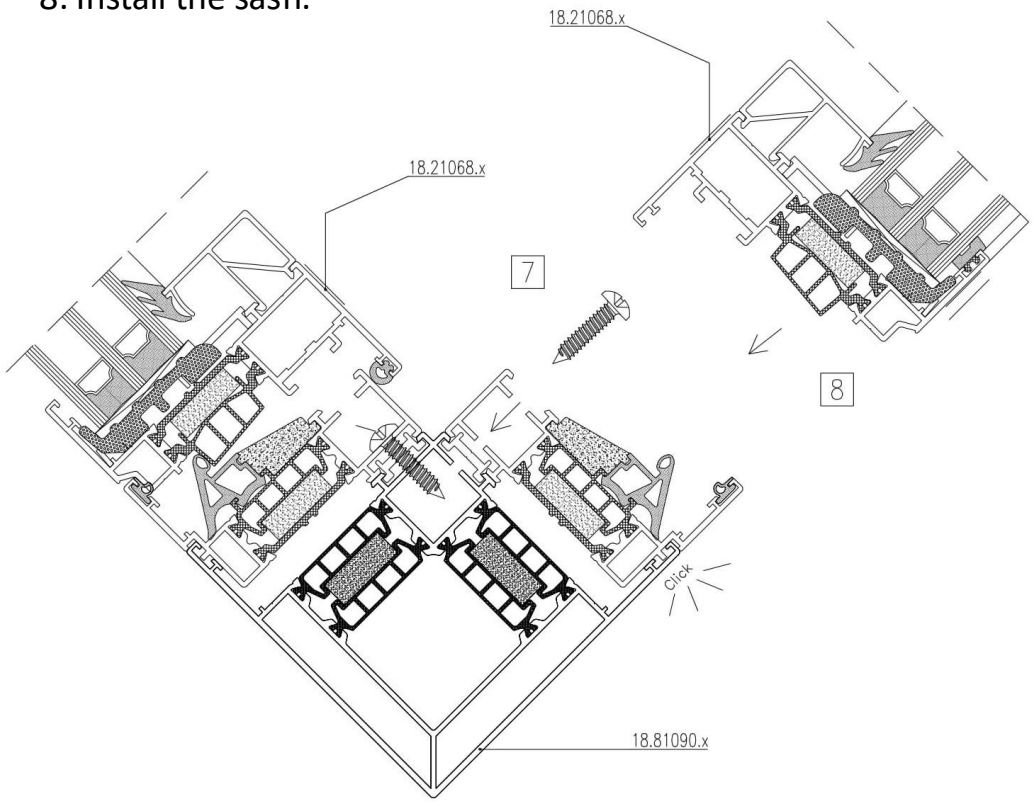

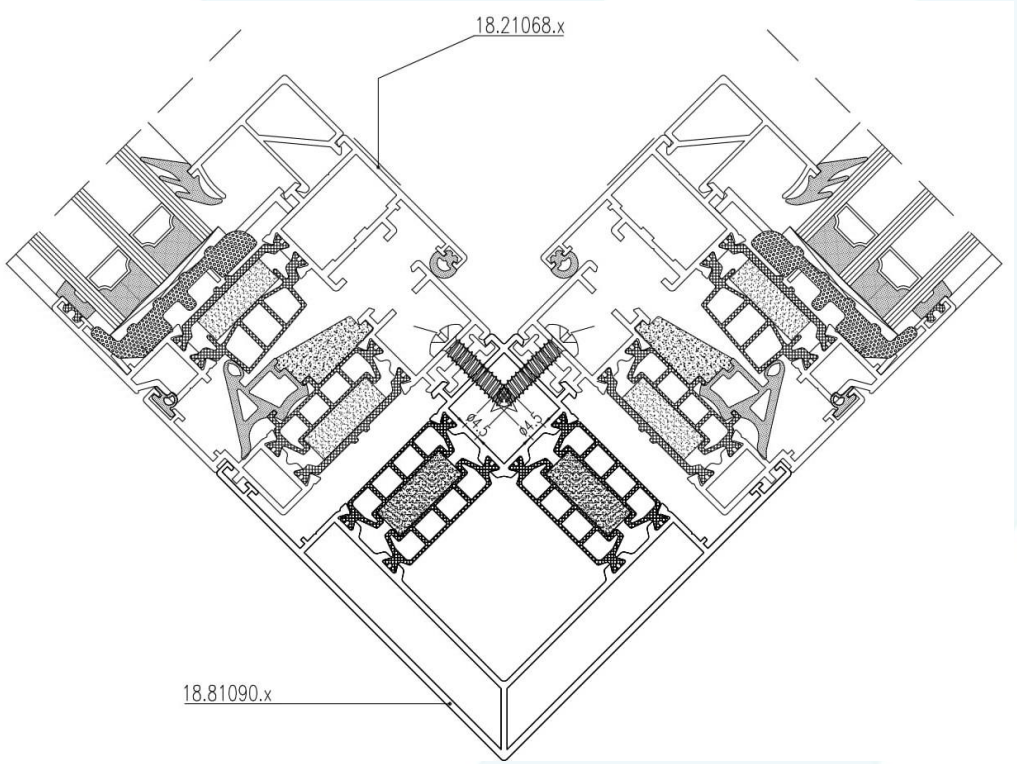

STEP 25 Full Glass Corners Connection

Before gluing the glass corner it should be cleaned and prepared in a way described below:

1. Clean the surface
2. Apply primer on cleaned surface.
3. Glue glass corner.

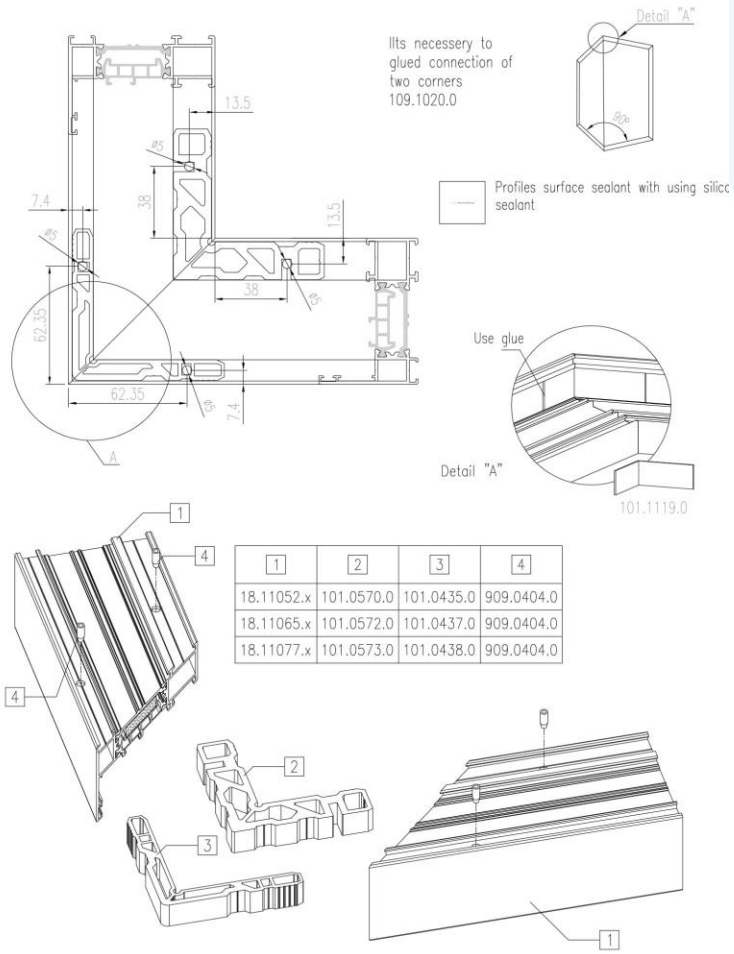

1	2	3	4
18.11052.x	101.0570.0	101.0435.0	909.0404.0
18.11065.x	101.0572.0	101.0437.0	909.0404.0
18.11077.x	101.0573.0	101.0438.0	909.0404.0

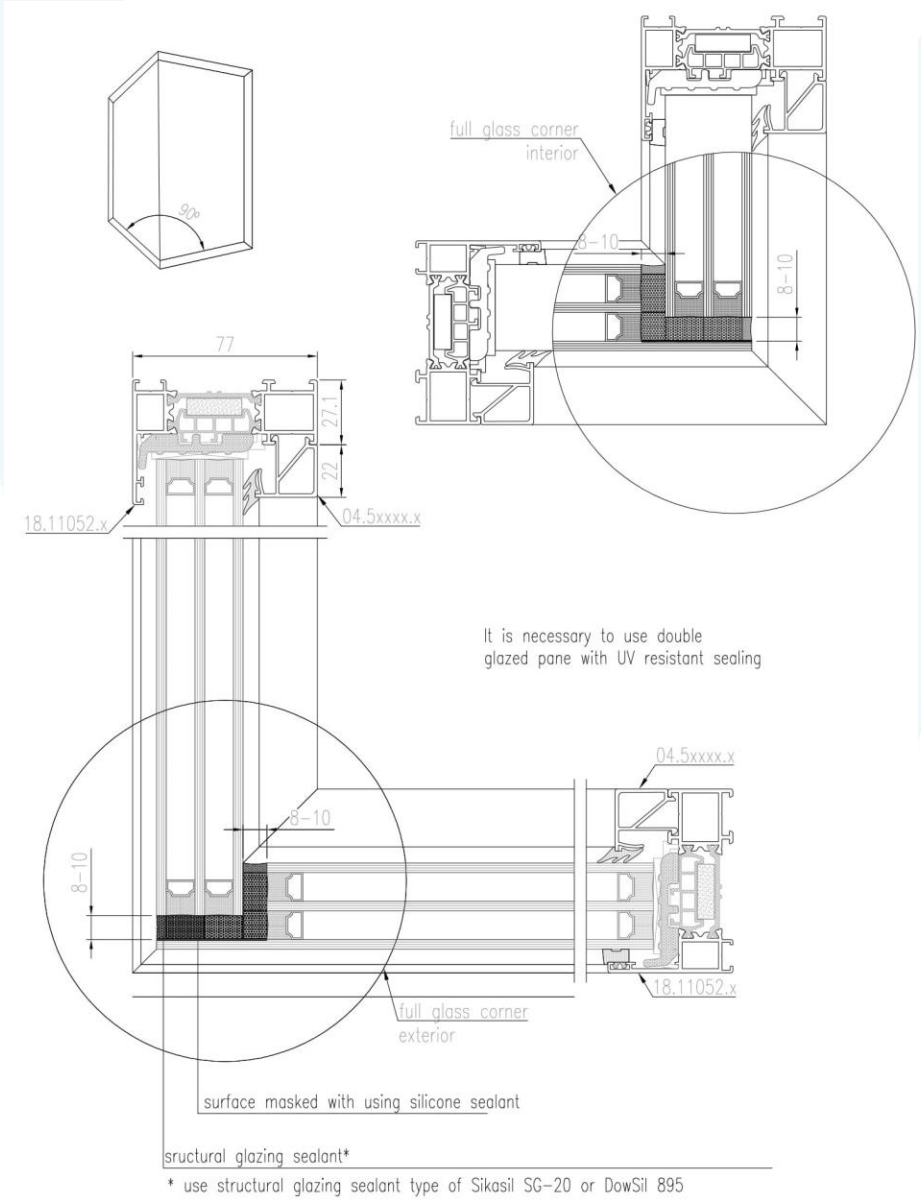

STEP 26 Full Glass Connection

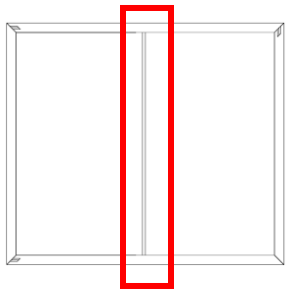

In some of the cases, it should be necessary to properly install and connect butt-glaze solution. Follow instruction shown below.

Glass edges surface, in place of inserting silicone sealant must be cleaned and dry before connection.

1.Install all glass panes in the frame and set up equal gaps between glass panes.

2.Clean the surface of the glass with isopropyl alcohol cleaner

3.Apply primer on the cleaned surface.

4.Put on foam seal between two glass pane (as shown below).

Recommended Silicone:
Sika Sil SG-20 or DC 895/DC 993/DC995

IMPORTANT! Two types of foam seals are available – round or rectangular. Use delivered one.

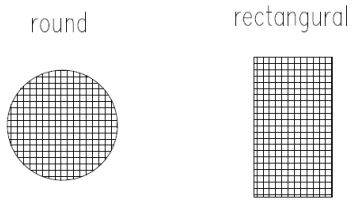

Attention! Before sealing glass make sure that the glass is properly shimmed.

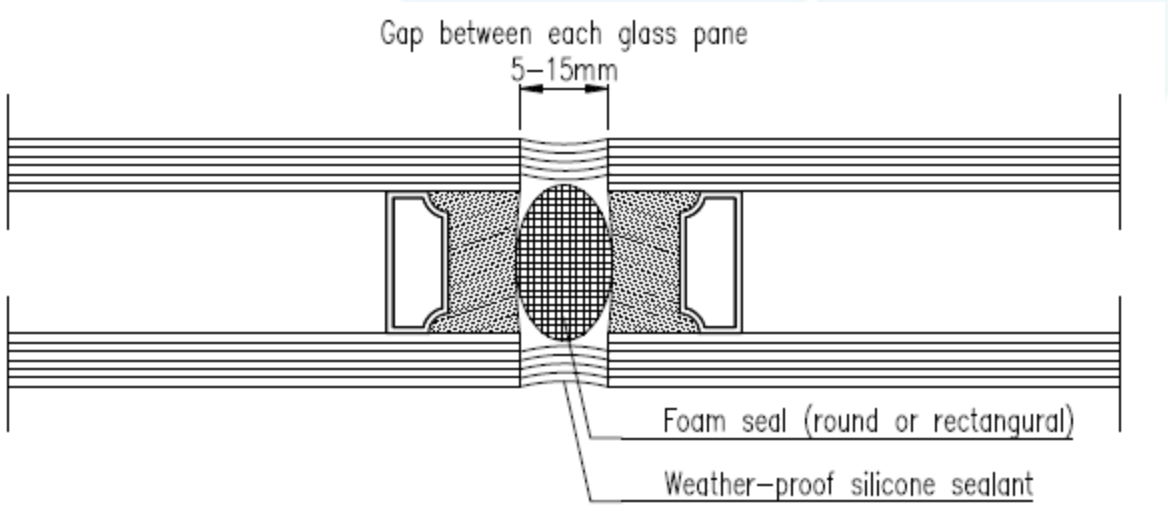

STEP 27 Fixed Sash With Frames Connection

1. First, unscrew the screw until it sinks into the spacer

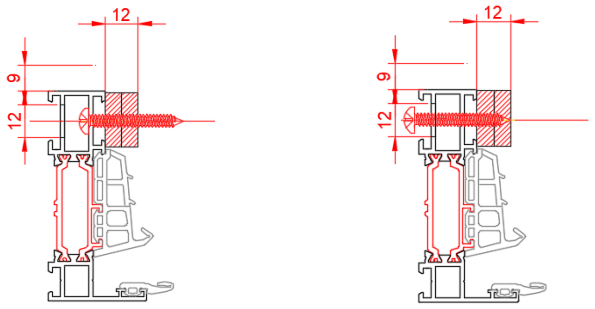

2. Then slide the sash into the frame maintaining the outer line with the frame, preferably using a builder's squeeze. The sash distance from the inside must be 9 mm.[15/32”]).

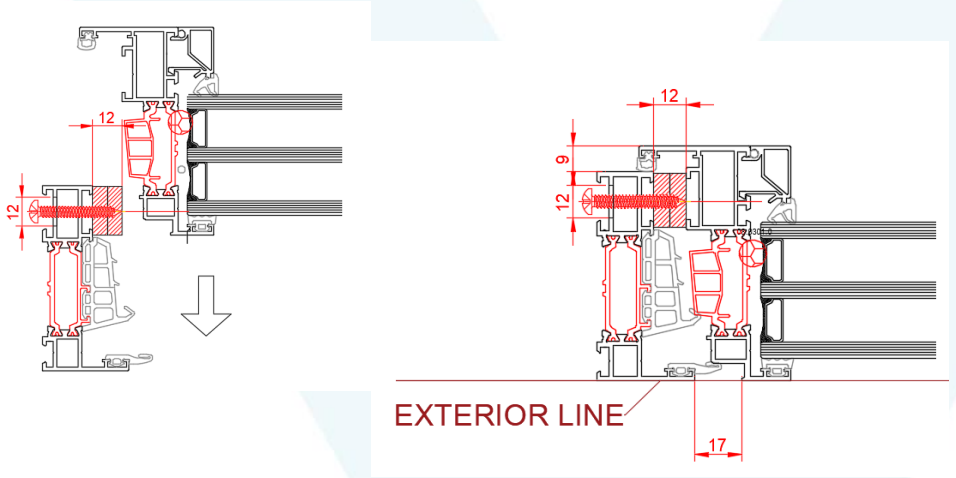

3. Tighten the screw

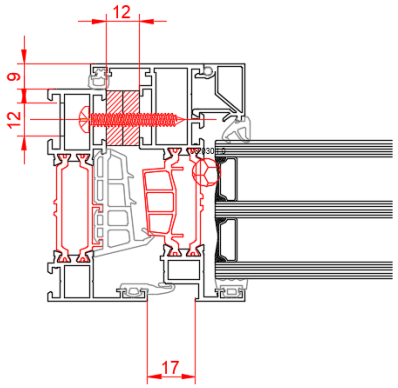

4. If the sash is without glass, then the clips must be removed, the glass inserted and displaced then the clips put back in place and the gasket installed.

STEP 18 Insect Screen Assembly

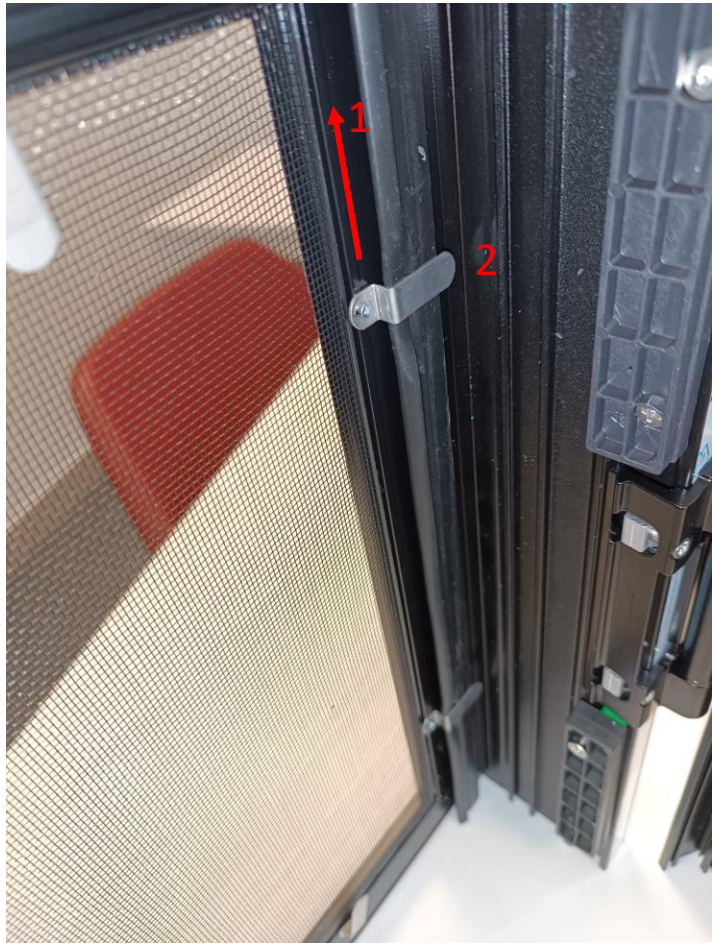

1. Twist the plates along the frame.
2. Attach the insect screento the window from the outside.
3. Open the sash.
4. Turn the plates 90 degrees toward the window frame.

Completion Checklist

1. Ensure the multipoint is operating smoothly (*if applicable*).
2. Ensure that handle is operating smoothly.
3. Ensure equal reveal to right and left of the system.
4. Ensure horizontal and vertical alignment.
5. Apply sealant to the following:

    A) Screw holes

    B) Each place where necessary

Recommended Product Care After Installation

1.install the plastic protection tape on the sill and keep after installation!

2.Create a sturdy bridge to protect sill during construction phase.

3.Place bridge while window, door, bifold door lift&slide and slide door system are in open position.

4.Protect the side jambs of the frame from damage.

5.Protect the window, door, bifold door lift&slide and sliding door system from the following:

- *Stucco*: causes etching on aluminum, stains wood, clogs the track and damages rollers.
- *Drywall*: stains wood; clogs the system tracks; gums up rollers.
- *Duct tape*: some adhesives chemically react with many finishes, therefore use tape such as painter's tape, but do not leave on any surface for more than 7 days.

6.Instructions for the Owner and General Contractor:

- Do not have small children operate or play within the confines of the window, door, bifold door lift&slide and sliding door system.
- Do not force the window, door, bifold door, lift&slide or sliding door system. Contact Yawal USA if operation becomes difficult.
- Apply protection bumpers where exterior/interior handles have contact with something that can damage the handle.

Recommended Product Care For End User

Cleaning Painted Windows, Door Frames and Sashes:

- Apply a low to medium pressure water rinse from top to bottom, rubbing lightly with a soft automobile brush or sponge.
- Use a mild detergent; a mild detergent that is safe for bare hands should be safe for painted windows; always spot test any detergent before using.
- Detergents should not be allowed to collect or puddle on the horizontal surfaces or in the joints. These surfaces should be flushed with water and dried.
- Rinse thoroughly with clear water. if the detergent is permitted to dry, it may be necessary to lightly sponge the surface while rinsing.
- Allow the surfaces to air dry or wipe dry with a chamois cloth.

Precautions For Cleaning Painted Finish

- Use cleaners sparingly; always follow cleanser manufacturer's instructions.
- Avoid dripping or splashing detergents on surrounding surfaces and vegetation; thoroughly rinse immediately.
- Make sure sponges, brushes, rags and chamois are free of dirt and grit.

Do Not Use Any Of The Following, Which Can Be Damaging:

- Glass cleaners containing ammonia
- Use of stiff bristle brushes, steel wool or scrubbing pads
- Use of knives, putty knives or scrapers
- Use of high-pressure nozzle
- Avoid ketones, lacquer thinners or paint removers.

Anodized finishes should only be cleaned with soap and water

Recommended Product Care For End User

Door Thresholds:

Wipe and wash the surface of the threshold using a mild detergent; this area should be kept free from dirt, insects, leaves and debris.

Hardware Care:

To maintain the proper hardware operation, accumulations of salt and grit should be cleaned and removed. Use compressed air to remove sand and salt.

Gear Operators:

Lubricate gear arms and pivot points using waterproof lubricant. The roto gear mechanism should be lubricated using high performance marine grade grease. Lubricate gear arms and pivot points using waterproof lubricant.

Casement And Awning Hinges:

Arms and tracks use compressed air to remove sand and salt from tracks. All operable parts should be lubricated and wiped down with waterproof lubricant. Apply a small amount of lubricant and work the vent open and closed to completely lubricate the tracks. Wipe off any excess.

Door Hardware

Care door hinges flush bolts and pivots

After cleaning, all operable parts should be lubricated and wiped down using waterproof lubricant. Apply a small amount to the hinges and move the door panel back and forth several times to work in the lubricant. Wipe off any excess.

Locksets

All operable parts should be lubricated and wiped down using waterproof lubricant. Operate the handle a few times to allow the lubricant to penetrate the latch assembly. Place a small amount of lubricant in the lock cylinder. Place the key in the cylinder and work the lubricant into the locking mechanism.

Recommended Product Care For End User

Multipoint Mechanism

Use compressed air to remove sand and salt from the multipoint lock mechanism. all operable parts should be lubricated and wiped down using waterproof lubricant.

Drainage And Weep Systems

It is normal for water to accumulate and drain out of weep holes found at door sill and thresholds. To allow for adequate drainage, this area should be kept free from dirt, insects, leaves and debris.

- Vacuum the sill and remove any debris
- Check sills for sealant adhesion and make sure that any setting screws are sealed
- Use A small soft brush to clean any debris from the door threshold weep holes

Frequency

Carry out care procedures with the following minimum recommendations:

- General environments – every 6 months.
- Coastal and industrial environments – every 3 months.
- Regular maintenance is required for all hardware - even stainless steel - to keep Manufacturer’s Warranty in place.

LET'S COLLABORATE!

CONTACT US

Yawal USA
11 W Hudson Ave.
Englewood, NJ 07631, USA
T. +1 (201) 753 2195
office@yawalusa.com

www.yawalusa.com